SpaceWire Development Tools and Support Equipment

SpaceWire Working Group Meeting
ESTEC July 2005

Steve Parkes

STAR-Dundee Ltd

STAR-Dundee

SpaceWire-PCI-2

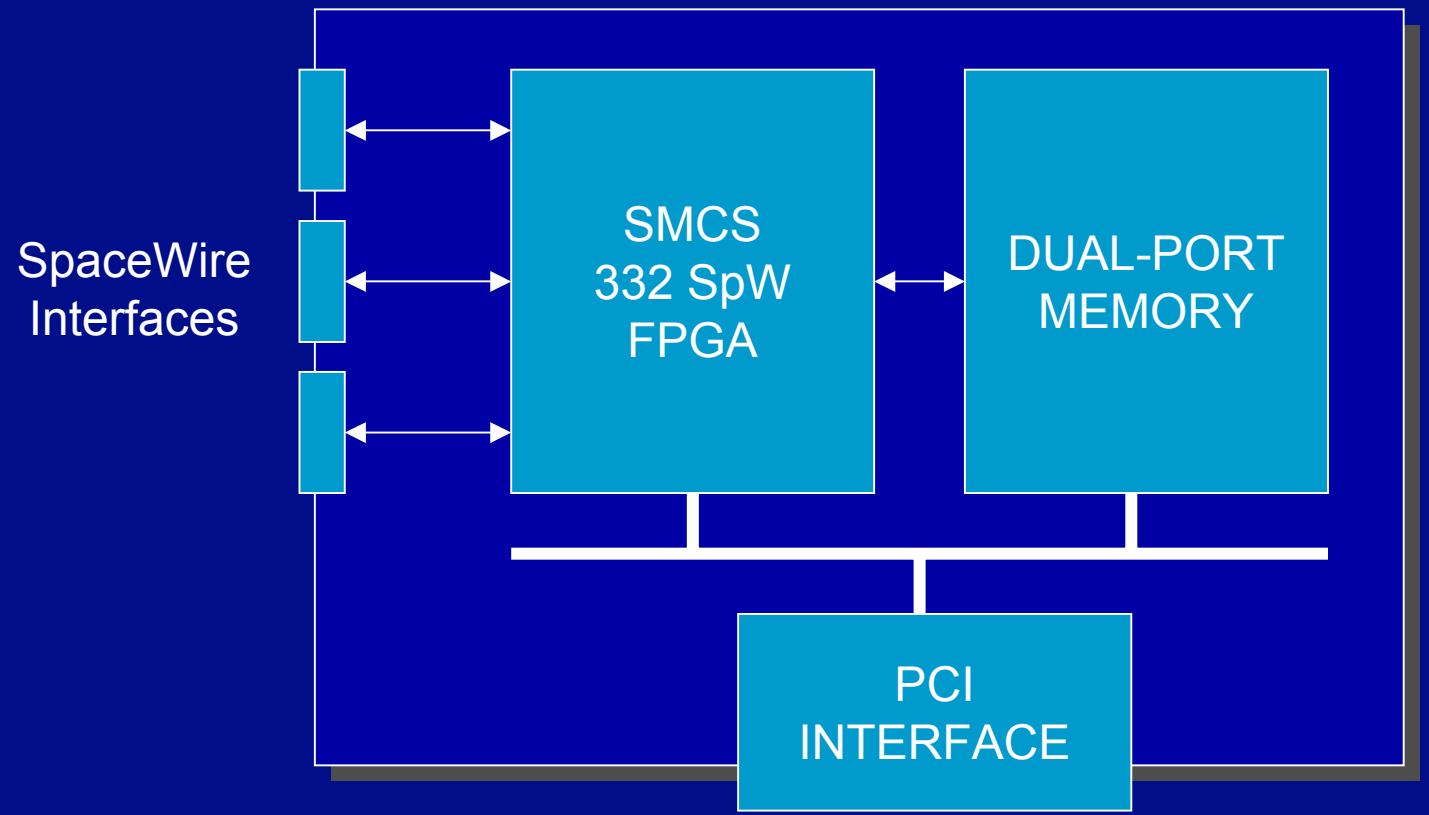

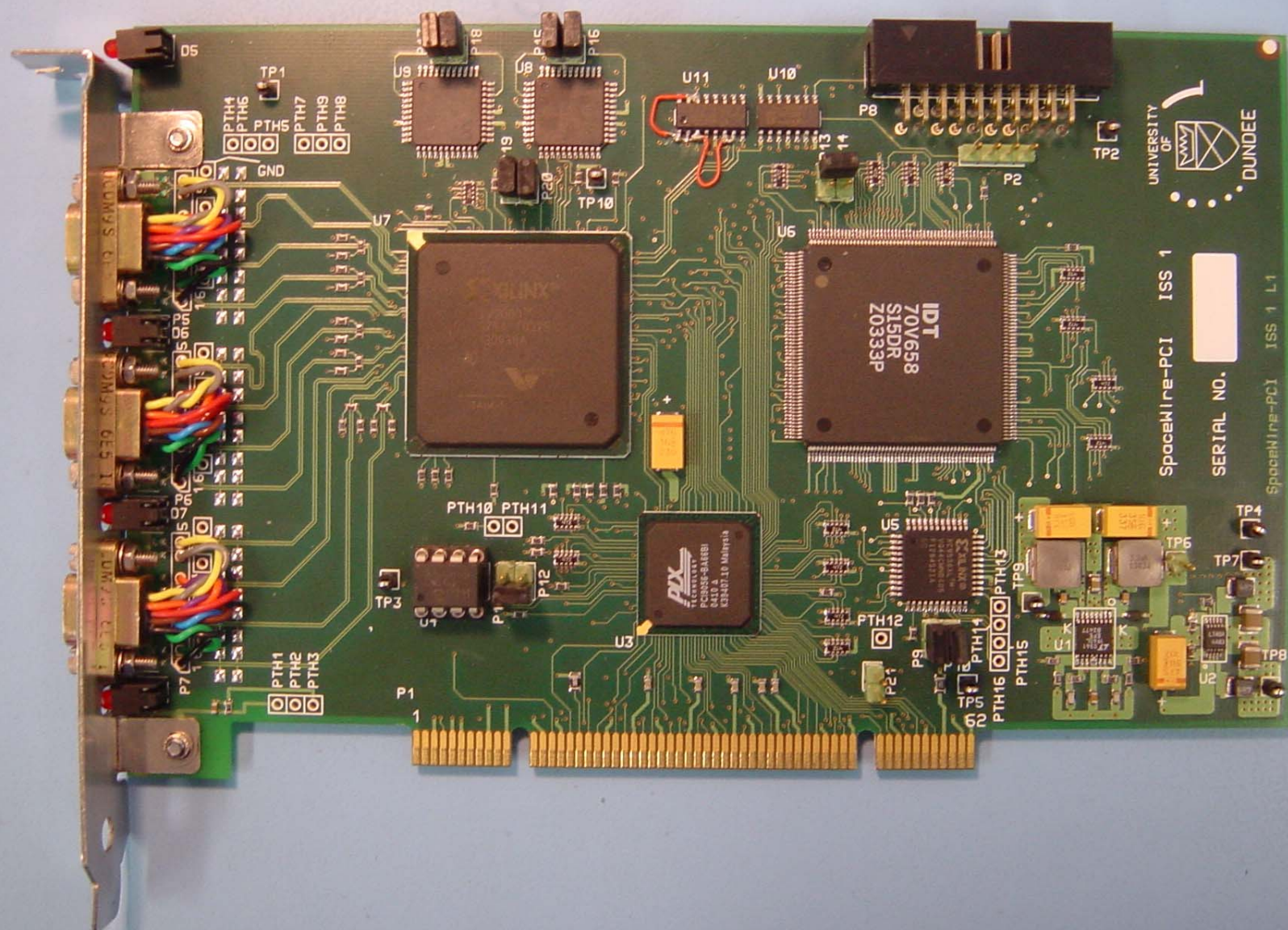

UNIVERSITY OF DUNDEE
SpaceWire-PCI ISS 1
SERIAL NO.
SpaceWire-PCI ISS 1 L1
IDT
70V658
S15DR
Z0333P
PTH10 PTH11
PTH12
PTH13
PTH14
PTH15
PTH16
PTH1
PTH2
PTH3
PTH4
PTH5
PTH6
PTH7
PTH8
PTH9
GND
TP1
TP2
TP3
TP4
TP5
TP6
TP7
TP8
TP9
TP10
U1
U2
U3
U5
U6
U7
U8
U9
U10
U11
P1
P2
P5
P6
P7
P8
P9
P12
P16
P18
P20
D5
D6
D7

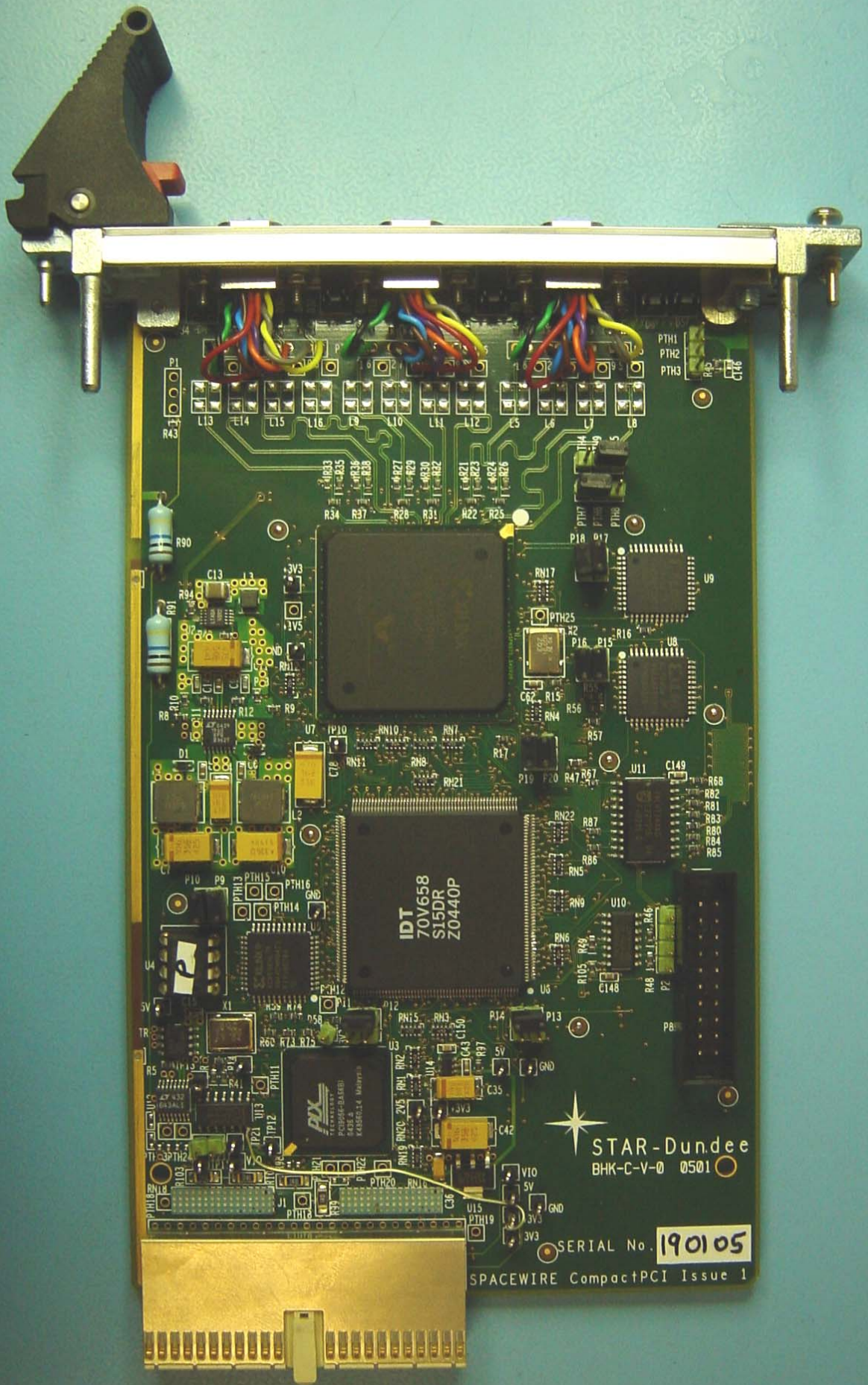
IDT
70V658
S15DR
Z0440P
STAR-Dundee
BHK-C-V-0 0501
SERIAL No. 190105
SPACEWIRE CompactPCI Issue 1

STAR-Dundee

SpaceWire Router-USB

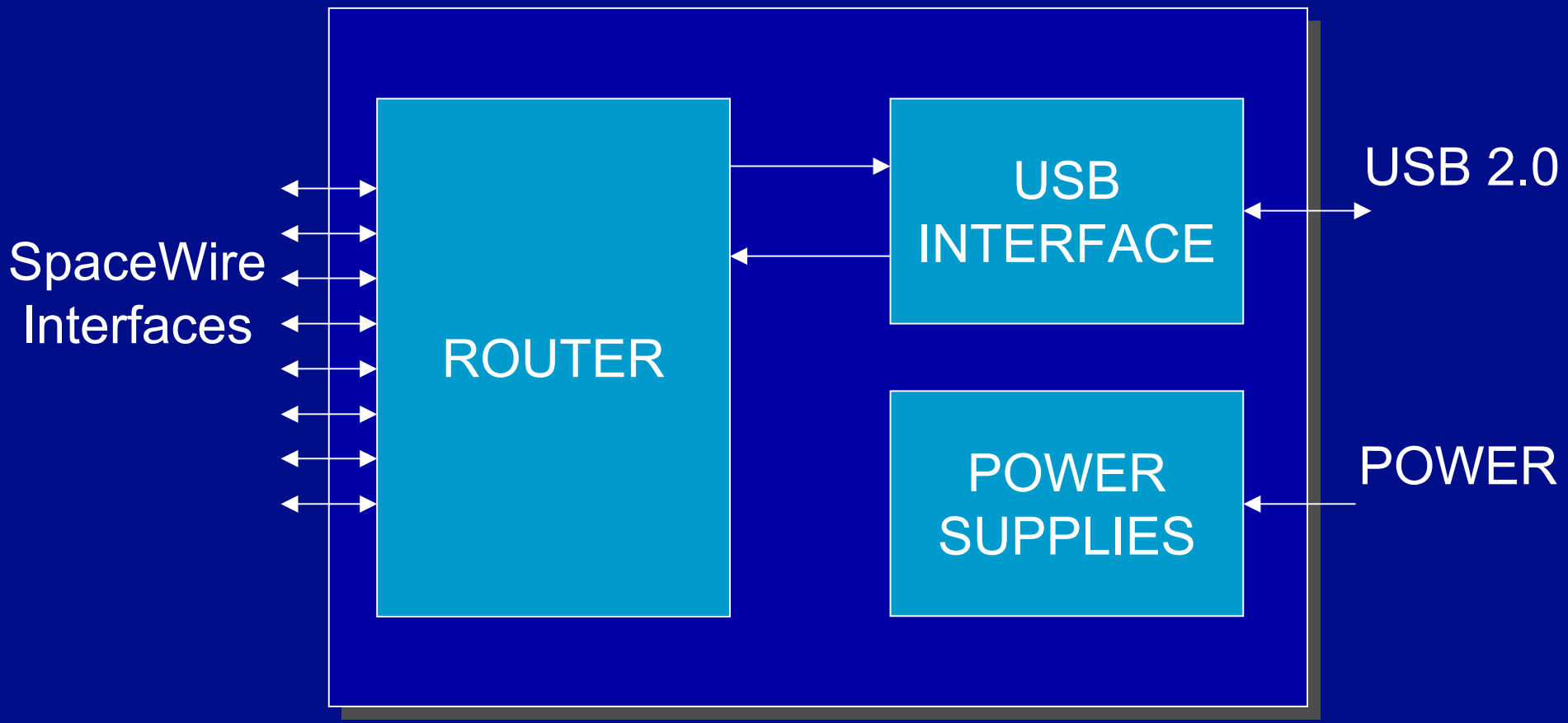

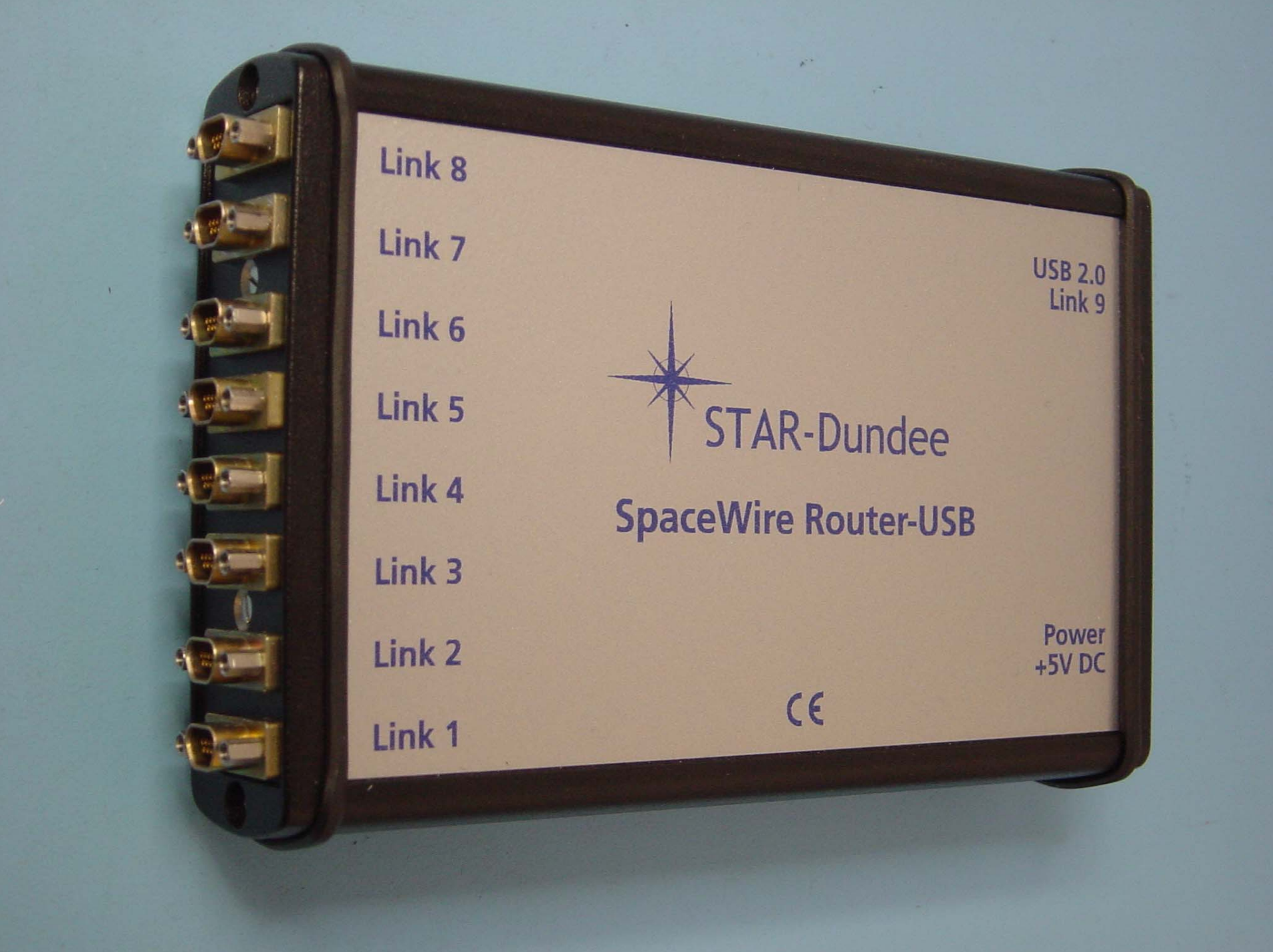
Link 8
Link 7
Link 6
Link 5
Link 4
Link 3
Link 2
Link 1
USB 2.0
Link 9
STAR-Dundee
SpaceWire Router-USB
Power
+5V DC
CE

STAR-Dundee

SpaceWire Brick

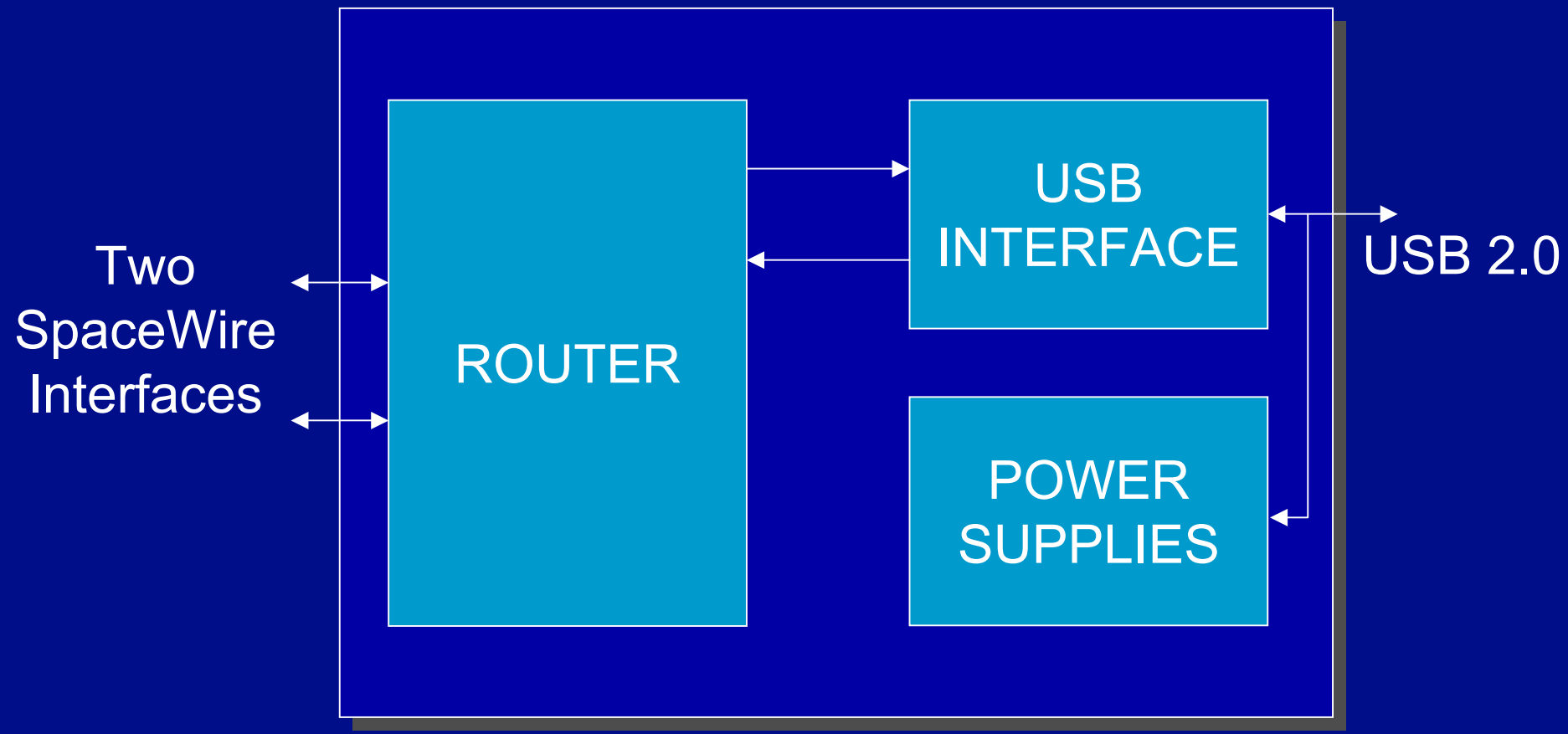

STAR-Dundee
SpaceWire-USB Brick

SpaceWire Drivers

- SpaceWire Router-USB and Brick
  - Linux
  - Windows (2000, XP)
- SpaceWire PCI-2 and cPCI
  - Windows (98, 2000, XP)
  - VxWorks
    - Pentium
    - PPC 750
  - Linux under development

SpaceWire Test Software

- Validation software
  - Simple packet transmit and receive
  - Configuration of routers
  - Sending and receiving of test packets
  - Time-code transmit and receive
- PETRI software
  - Aimed at testing user equipment
  - Send commands, receive response
  - Commands defined in text file
  - When to receive defined in the text file
  - Run from command line
  - Responses put in text file
- Example application source code

PETRI Commands

- Some typical PETRI Commands:

```
S A:65 D:10 2E F8;
R L:3;
S A:65 D:99 99 00 0B;
S A:65 D:00 4C;
R L:5;
R L:100;
```

- Send a three byte packet to to SpaceWire address 65
- Receive a packet of length 3 bytes
- Send two more packets to address 65 (4 bytes, then 2 bytes)
- Receive two more packets (5 bytes, then 100 bytes)

PETRI Responses

- Each Receive Command results in an entry in the log being made.
- Example Responses:

```
F 93 4E 26 EOP
F 73 65 32 0A 5B EOP
F 6C 00 5A 85 6D B1 EOP
```

  - A full packet was received, containing 3 bytes and terminated by an EOP marker
  - A full packet was received, containing 5 bytes and terminated by an EOP marker
  - A full packet was received, containing 6 bytes and terminated by an EOP marker

STAR-Dundee

SpaceWire Monitor

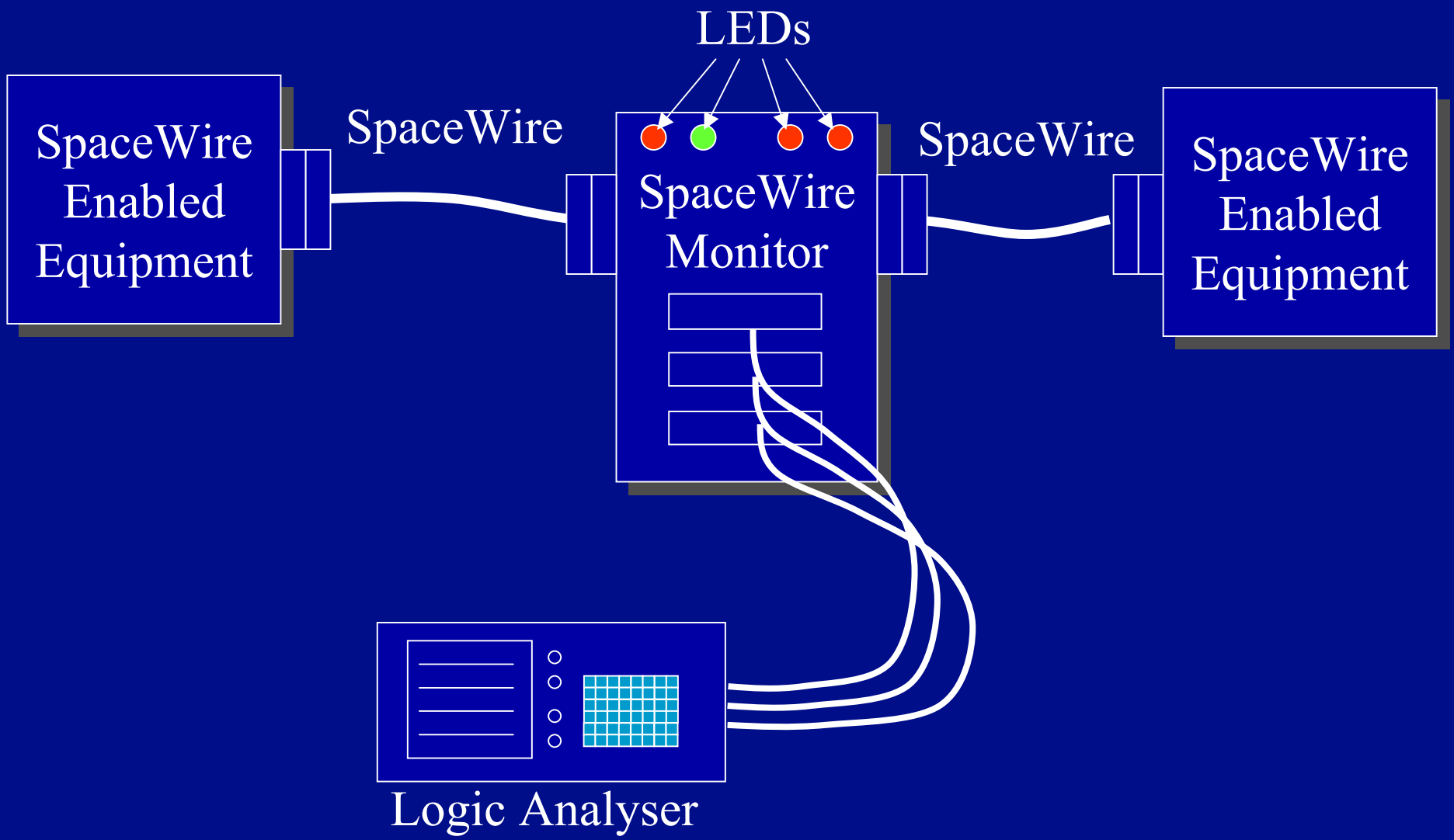

A
B
UNBUFFERED
A
B
BUFFERED
SpaceWire Monitor
A to B
B to A
Disconnected
Parity Error
Credit Error
ESC Error
Character Sequence Error
Disconnecting
Connecting
Monitor State
Failed Sync
Synchronised
NULL
FCT
Data Character
EOP
EEP
Time-Code
STAR-Dundee

Analyzer | Listing RECEIVER1 | Cancel | Run

Markers Off

Acquisition Time
07 Nov 2002 13:08:56

Label> / Base>	RXCHA1 Symbol	RXCHA2 Symbol	NCHAR1 Hex	NCHAR2 Hex	Time Relativ
30	NULL		000	015	24
31	ESCAPE	NCHAR	000	016	16
32	NULL		000	016	24
33	ESCAPE		000	017	16
34		NCHAR	000	017	8
35	NULL		000	017	16
36	ESCAPE		000	017	16
37	NULL	NCHAR	000	018	24
38	ESCAPE		000	018	16
39	NULL		000	019	24
40		NCHAR	000	019	8
41	ESCAPE		000	019	8
42	NULL	EOP	000	100	24
43		ESCAPE	000	100	8
44	ESCAPE		000	100	8
45		NULL	000	100	16

STAR-Dundee

SpaceWire Link Analyser

- GUI specifically for SpaceWire
- Monitors traffic on link
- Triggers on specific SpaceWire events
- Or sequence of events
- Captures and displays SpaceWire events
- Oscilloscope or Logic Analyser
- Fault injection

STAR-Dundee
SpaceWire Link Analyser

Status Counters

Characters/Events Per Second

	A --> B	B --> A
Signaling Rate	200.001 MHz	200.001 MHz
Disconnect Error	0	0
Parity Error	0	0
Credit Error	0	0
Escape Error	0	0
Char Sequence Error	0	0
Data Character	0	9,689,501
EOP Character	0	485
EEP Character	0	0
FCT Character	1,211,240	0
NULL Character	24,394,329	12,888,020
Time-code Character	0	0

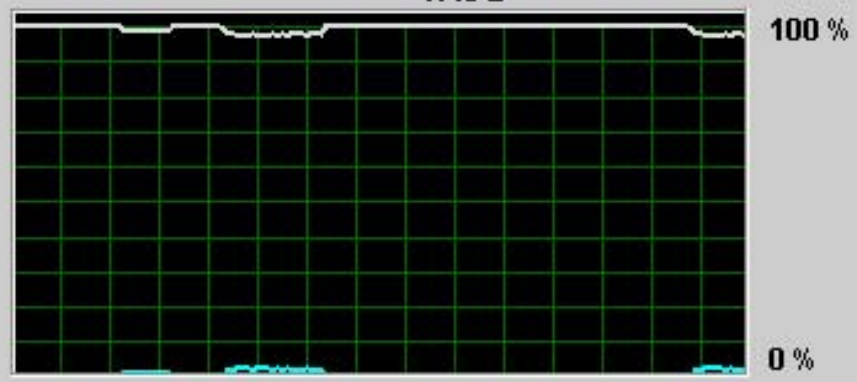

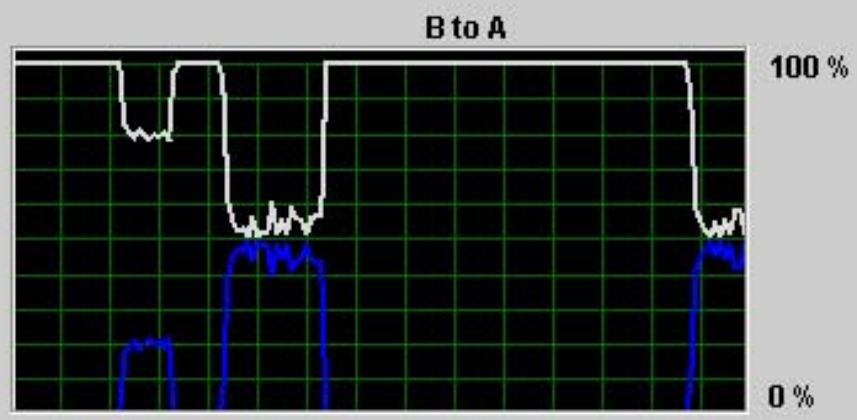

Clear Freeze

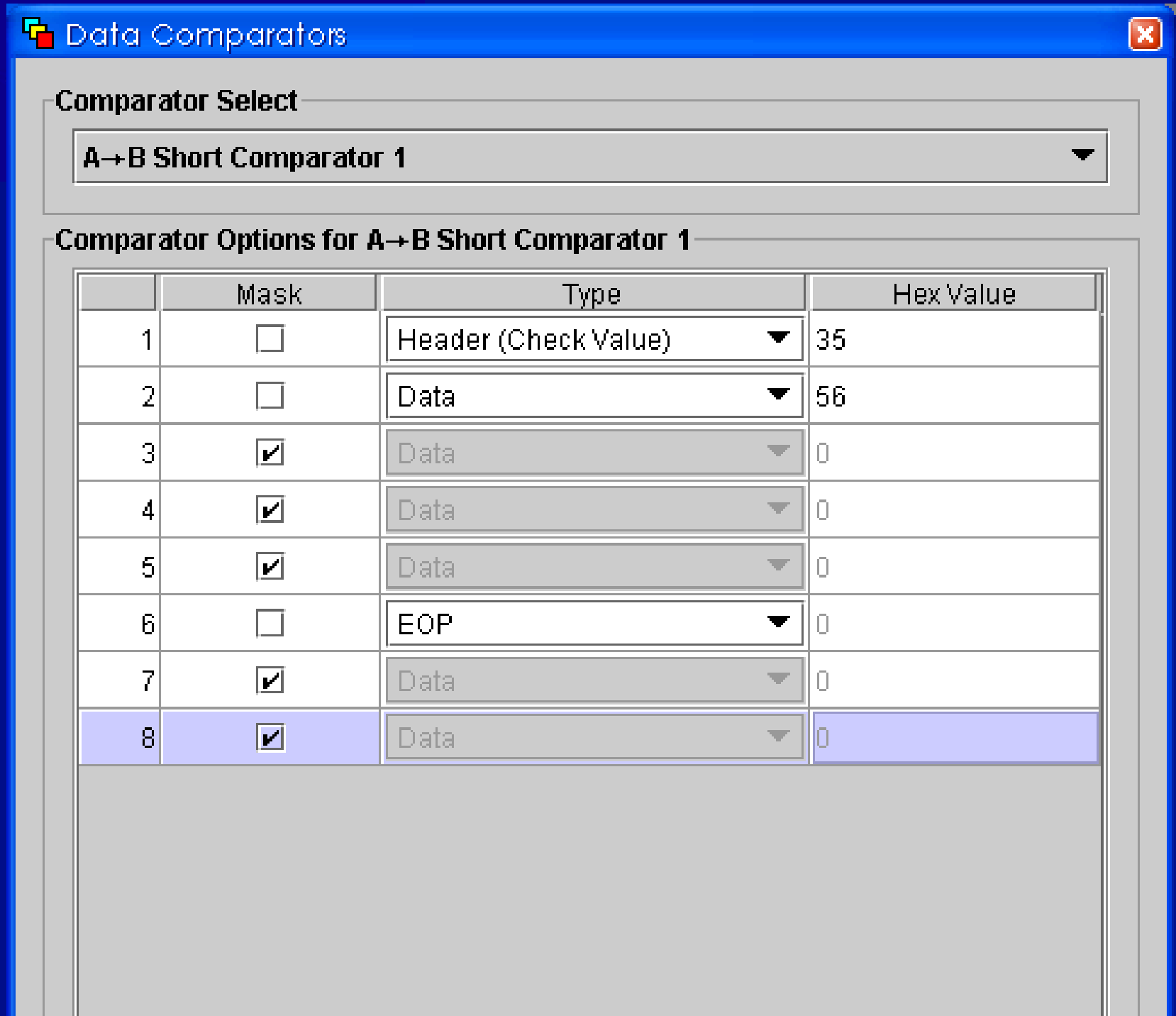
Data Comparators
Comparator Select
A→B Short Comparator 1
Comparator Options for A→B Short Comparator 1
Mask
Type
Hex Value
1
Header (Check Value)
35
2
Data
56
3
Data
0
4
Data
0
5
Data
0
6
EOP
0
7
Data
0
8
Data
0

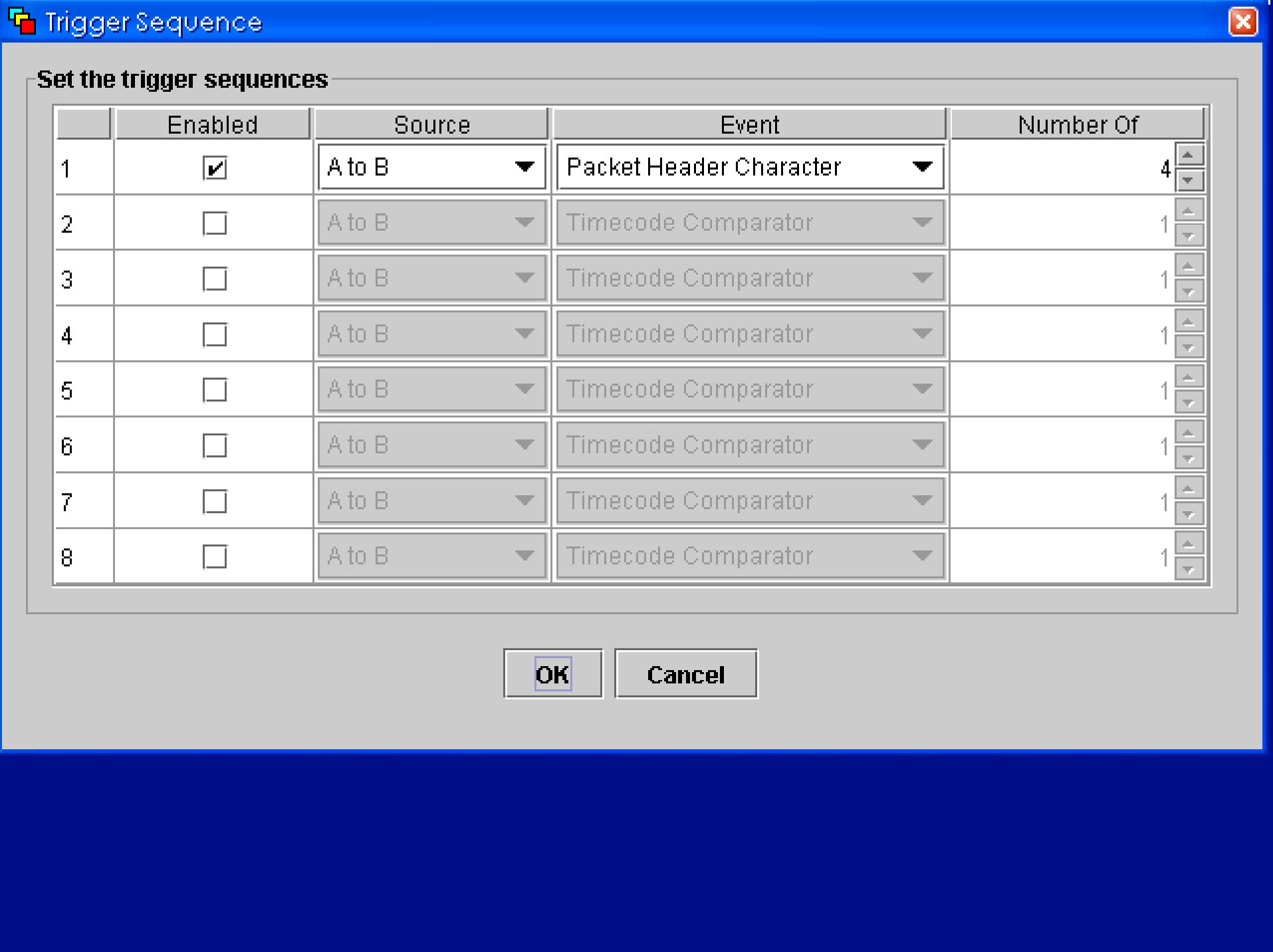
Trigger Sequence
Set the trigger sequences
Enabled
Source
Event
Number Of
1
A to B
Packet Header Character
4
2
A to B
Timecode Comparator
1
3
A to B
Timecode Comparator
1
4
A to B
Timecode Comparator
1
5
A to B
Timecode Comparator
1
6
A to B
Timecode Comparator
1
7
A to B
Timecode Comparator
1
8
A to B
Timecode Comparator
1
OK
Cancel

SpaceWire Link Analyser - [~~ Not Saved ~~]

File View Options Trigger Help

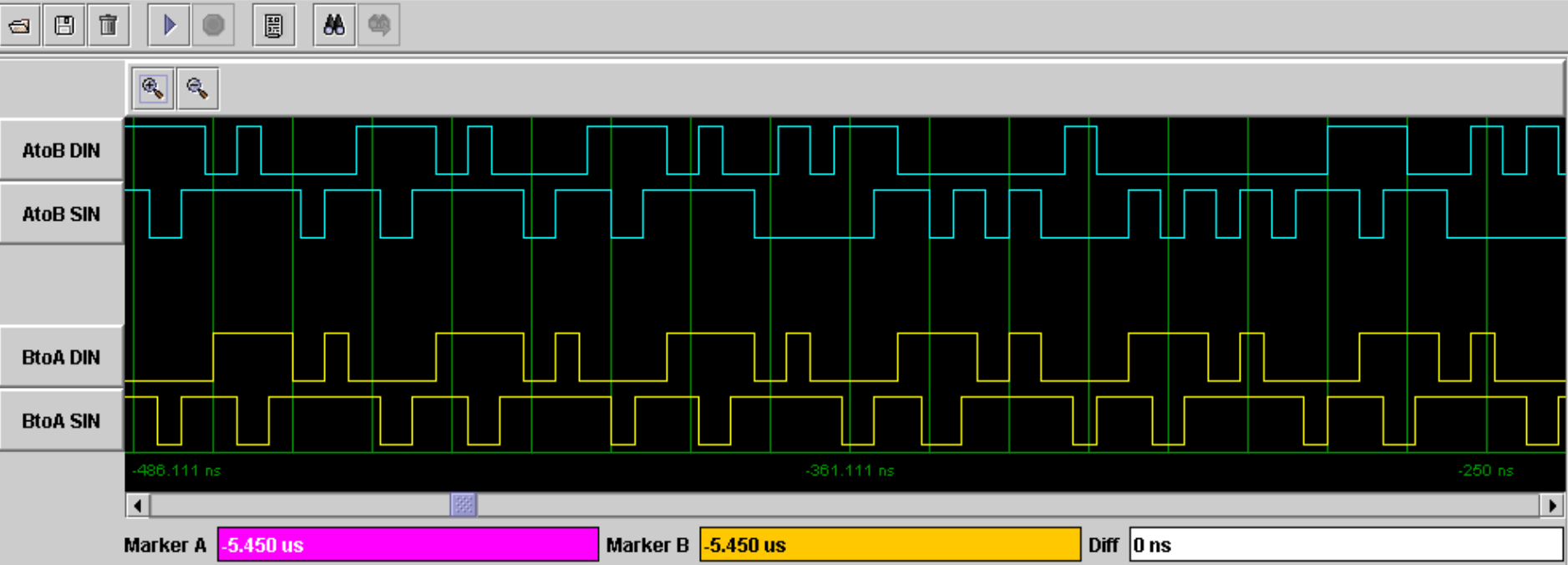

Marker A -5.450 us Marker B -5.450 us Diff 0 ns

Character Display | Packet Display | Bit-Stream Display

Trigger State: Idle | AtoB (200.001 MHz) | BtoA (200.001 MHz)

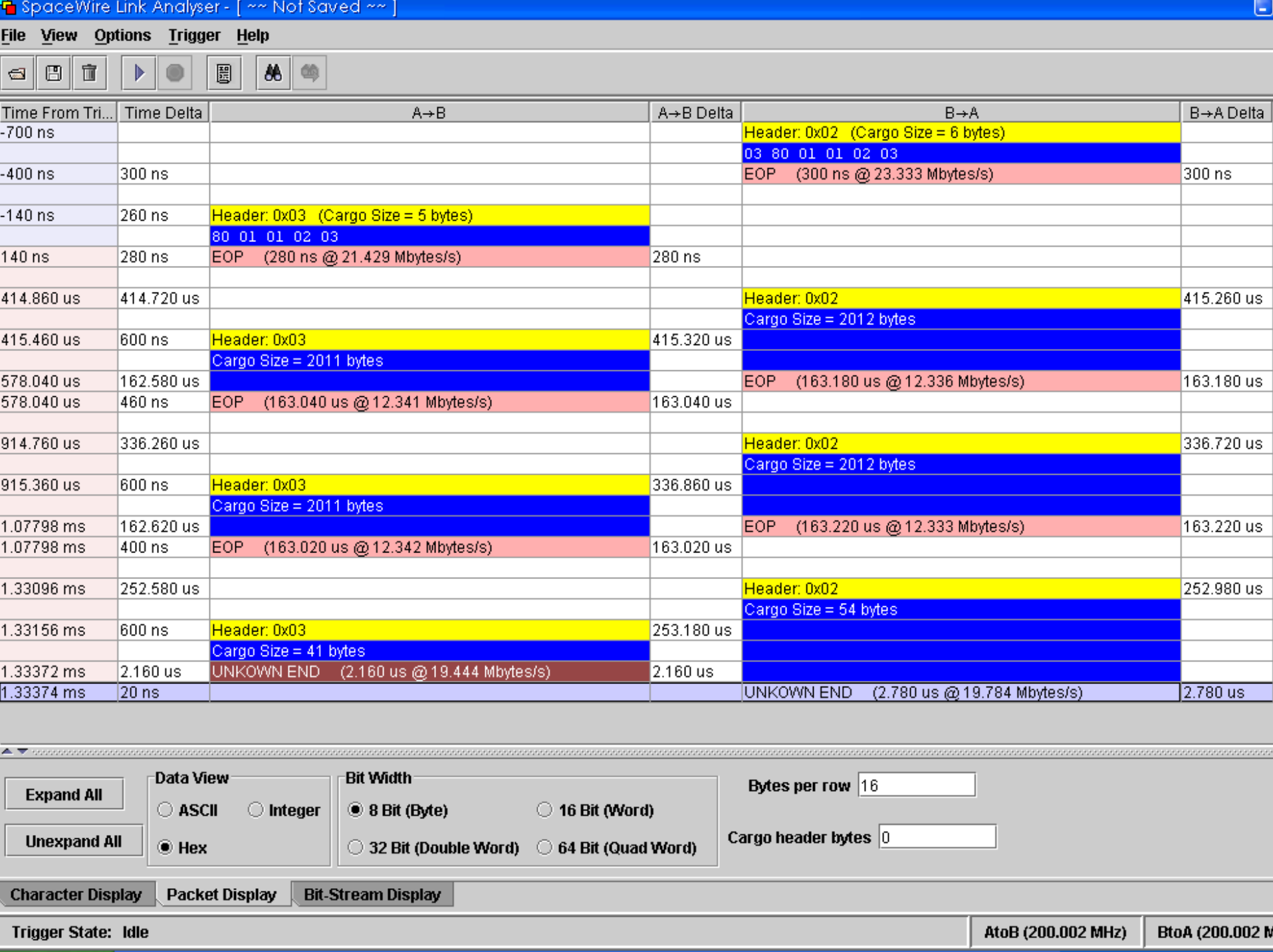
SpaceWire Link Analyser - [~~ Not Saved ~~]
File View Options Trigger Help
Time From Tri... | Time Delta | A→B | A→B Delta | B→A | B→A Delta
-700 ns | | | | Header: 0x02 (Cargo Size = 6 bytes)
03 80 01 01 02 03
-400 ns | 300 ns | | | EOP (300 ns @ 23.333 Mbytes/s) | 300 ns
-140 ns | 260 ns | Header: 0x03 (Cargo Size = 5 bytes)
80 01 01 02 03
140 ns | 280 ns | EOP (280 ns @ 21.429 Mbytes/s) | 280 ns
414.860 us | 414.720 us | | | Header: 0x02 | 415.260 us
Cargo Size = 2012 bytes
415.460 us | 600 ns | Header: 0x03 | 415.320 us
Cargo Size = 2011 bytes
578.040 us | 162.580 us | | | EOP (163.180 us @ 12.336 Mbytes/s) | 163.180 us
578.040 us | 460 ns | EOP (163.040 us @ 12.341 Mbytes/s) | 163.040 us
914.760 us | 336.260 us | | | Header: 0x02 | 336.720 us
Cargo Size = 2012 bytes
915.360 us | 600 ns | Header: 0x03 | 336.860 us
Cargo Size = 2011 bytes
1.07798 ms | 162.620 us | | | EOP (163.220 us @ 12.333 Mbytes/s) | 163.220 us
1.07798 ms | 400 ns | EOP (163.020 us @ 12.342 Mbytes/s) | 163.020 us
1.33096 ms | 252.580 us | | | Header: 0x02 | 252.980 us
Cargo Size = 54 bytes
1.33156 ms | 600 ns | Header: 0x03 | 253.180 us
Cargo Size = 41 bytes
1.33372 ms | 2.160 us | UNKOWN END (2.160 us @ 19.444 Mbytes/s) | 2.160 us
1.33374 ms | 20 ns | | | UNKOWN END (2.780 us @ 19.784 Mbytes/s) | 2.780 us
Expand All
Unexpand All
Data View
ASCII Integer Hex
Bit Width
8 Bit (Byte) 16 Bit (Word) 32 Bit (Double Word) 64 Bit (Quad Word)
Bytes per row 16
Cargo header bytes 0
Character Display Packet Display Bit-Stream Display
Trigger State: Idle
AtoB (200.002 MHz) BtoA (200.002 M

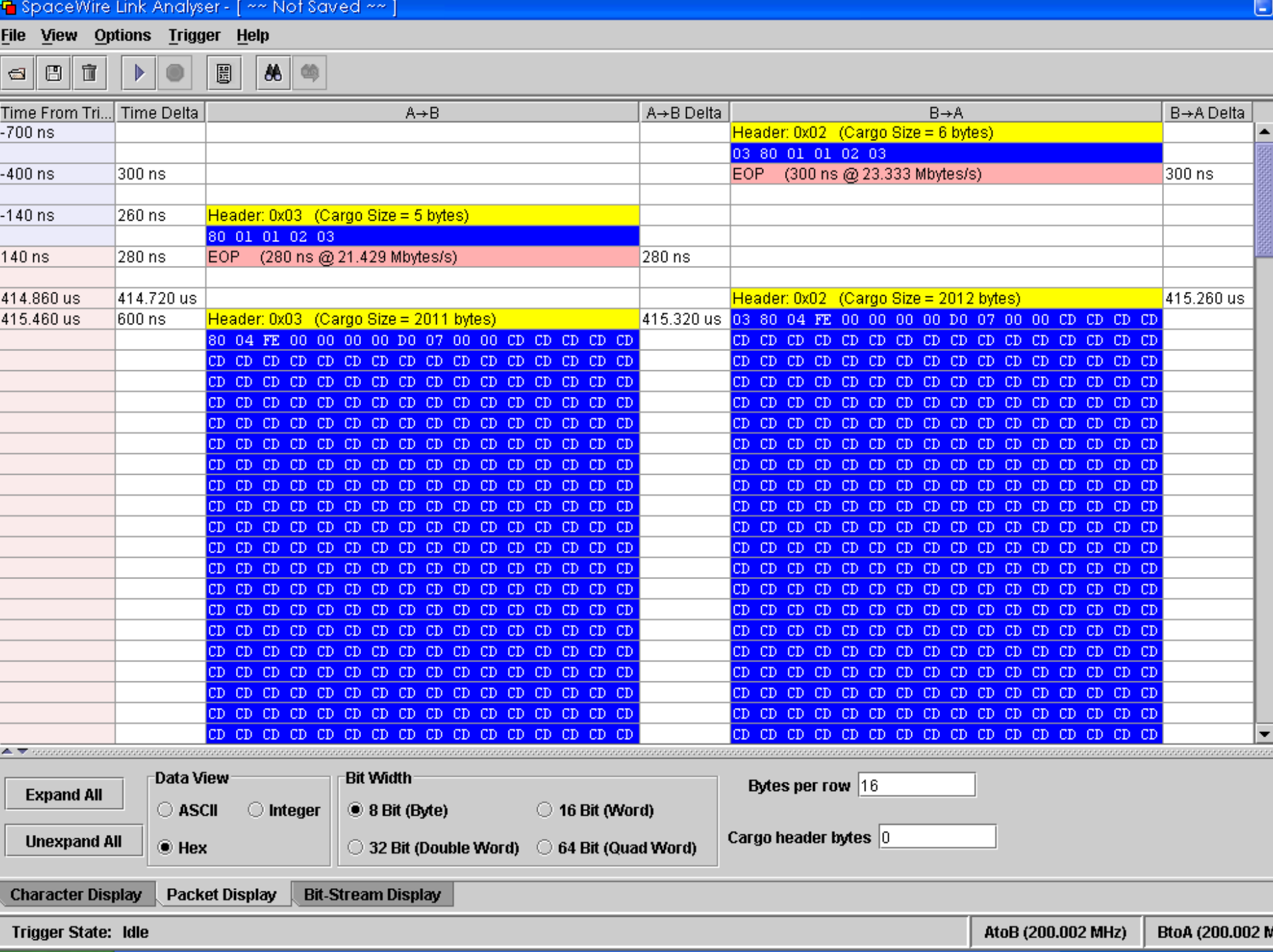
SpaceWire Link Analyser - [~~ Not Saved ~~]
File View Options Trigger Help
Time From Tri... | Time Delta | A→B | A→B Delta | B→A | B→A Delta
-700 ns | | | | Header: 0x02 (Cargo Size = 6 bytes) |
| | | | 03 80 01 01 02 03 |
-400 ns | 300 ns | | | EOP (300 ns @ 23.333 Mbytes/s) | 300 ns
-140 ns | 260 ns | Header: 0x03 (Cargo Size = 5 bytes) | | |
| | 80 01 01 02 03 | | |
140 ns | 280 ns | EOP (280 ns @ 21.429 Mbytes/s) | 280 ns | |
414.860 us | 414.720 us | | | Header: 0x02 (Cargo Size = 2012 bytes) | 415.260 us
415.460 us | 600 ns | Header: 0x03 (Cargo Size = 2011 bytes) | 415.320 us | 03 80 04 FE 00 00 00 00 D0 07 00 00 CD CD CD CD
80 04 FE 00 00 00 00 D0 07 00 00 CD CD CD CD CD | CD CD CD CD CD CD CD CD CD CD CD CD CD CD CD CD
Expand All
Unexpand All
Data View
ASCII Integer
Hex
Bit Width
8 Bit (Byte) 16 Bit (Word)
32 Bit (Double Word) 64 Bit (Quad Word)
Bytes per row 16
Cargo header bytes 0
Character Display Packet Display Bit-Stream Display
Trigger State: Idle
AtoB (200.002 MHz)
BtoA (200.002 M

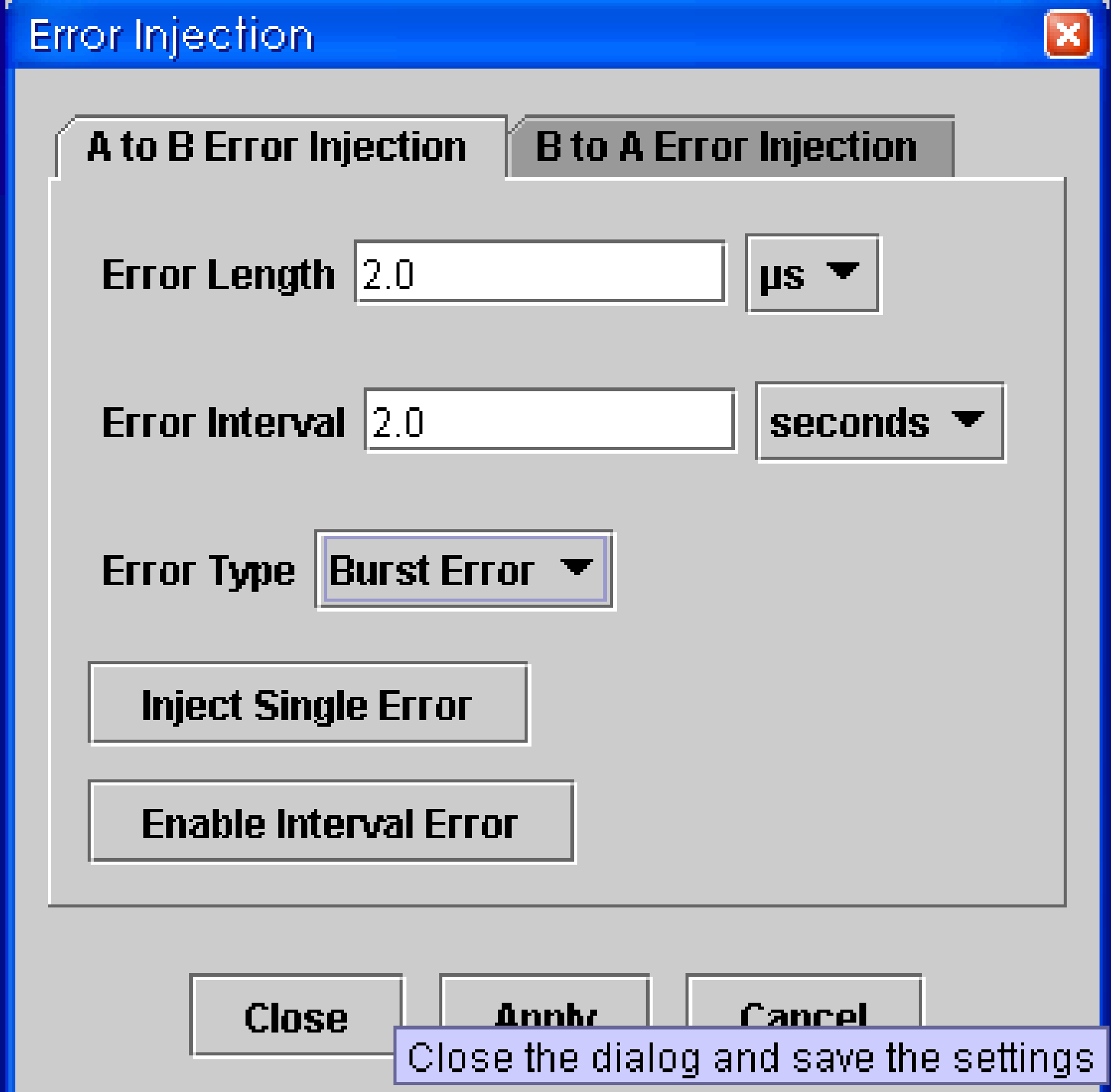
Error Injection
A to B Error Injection
B to A Error Injection
Error Length
2.0
µs
Error Interval
2.0
seconds
Error Type
Burst Error
Inject Single Error
Enable Interval Error
Close
Apply
Cancel
Close the dialog and save the settings

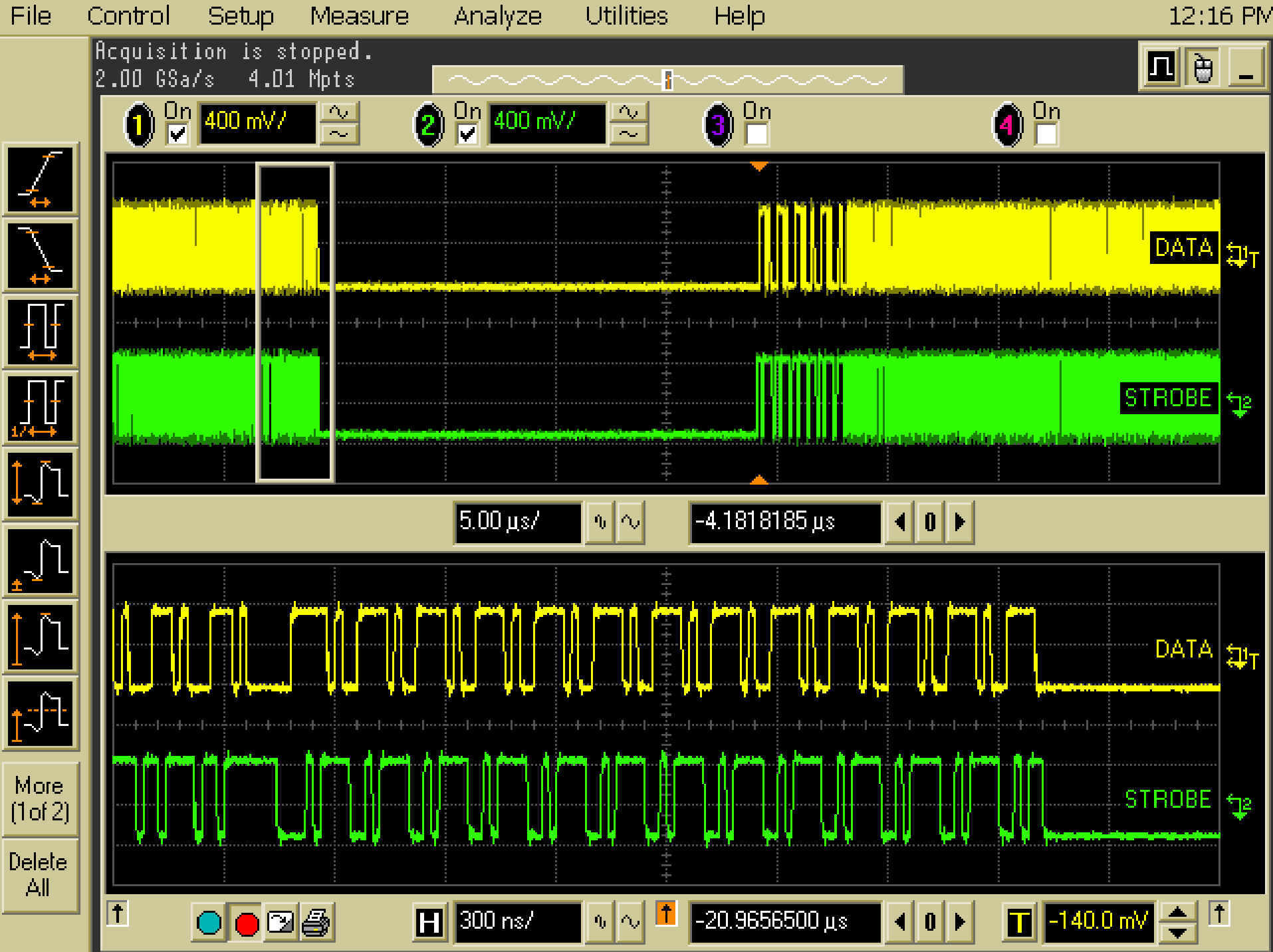
File
Control
Setup
Measure
Analyze
Utilities
Help
12:16 PM
Acquisition is stopped.
2.00 GSa/s 4.01 Mpts
1 On 400 mV/
2 On 400 mV/
3 On
4 On
DATA
STROBE
5.00 µs/
-4.1818185 µs
DATA
STROBE
H 300 ns/
-20.9656500 µs
T -140.0 mV
More (1 of 2)
Delete All

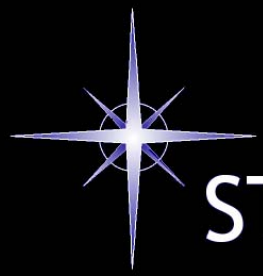

STAR-Dundee

- Products shipping now
  - SpaceWire Router-USB
  - SpaceWire USB Brick
  - SpaceWire Monitor
  - SpaceWire Link Analyser
  - SpaceWire PCI 2
  - SpaceWire cPCI
- CE/FCC certification

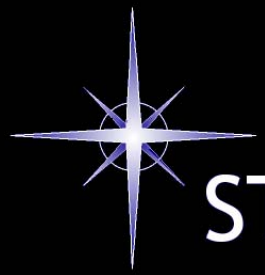

STAR-Dundee

- Products shipping with
  - Validation Software (USB & PCI)
  - PETRI Software (USB only)
  - Example Application in Source Code
- Applications Support

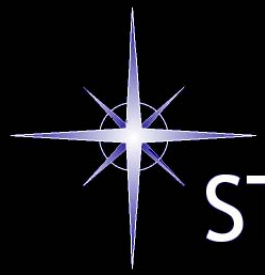

STAR-Dundee

- Coming soon
  - SpaceWire Conformance Tester
  - SpaceWire IP Tunnel
  - Remote Memory Access Protocol

STAR-Dundee

- Support for users of SpaceWire
  - Test equipment
  - Test software
  - Software drivers
  - Development support
  - IP support
  - ASIC support

SpaceWire IP

- SpaceWire CODEC
  - Configurable VHDL core
  - Suitable for ASIC and FPGA implementation
  - IP licence available from ESA or UoD
- SpaceWire Router
  - Configurable VHDL Router
  - Generics for
    - Number of SpaceWire Ports
    - Number of External Ports
  - IP licence from University of Dundee