SpaceWire PC Card Development

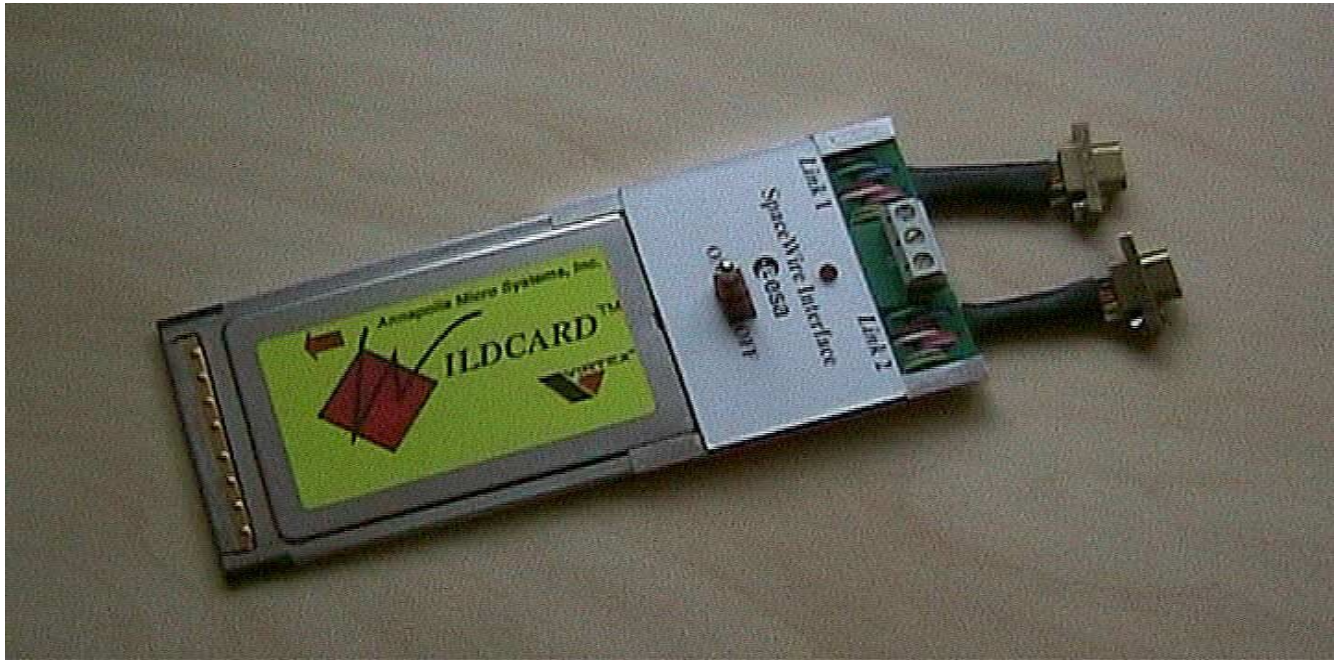

Patria New Technologies Oy

ESA / ESTEC

SpaceWire PC Card

- Standard type II PC Card (Cardbus I/F) with two SpaceWire links
  → Access to SpaceWire networks by using a standard laptop computer

- The SpaceWire PC card consists of four main components:
  - Commercial Wildcard™ PC card (*Annapolis Micro Systems inc.)* containing a re-configurable Xilinx FPGA
  - Two SpaceWire Link IP cores & custom interface logic implemented in the FPGA
  - Custom LVDS interface board with LVDS tranceivers and two SpaceWire interfaces
  - Comprehensive set of SW API functions for Windows and Linux and an Application Software for debug purposes (Win98, 2000 and XP)

Prototype Development

- ESA internal development
- First prototypes designed Q3-Q4/2002 at ESTEC
  - Idea and design of the whole concept
  - LVDS Interface board requirements and search for subcontractor
  - First FPGA implementation
  - First LVDS Interface board prototypes delivered by the University of Delft
  - Graphical User Interface for debugging purposes

On-going Development

- SpaceWire PC Card “Release 1” Development by Patria New Technologies OY
  - Implementing new SpW Link IP cores (UoD) compliant with the latest standard
  - Correcting detected bugs and improving performance
  - Designing a comprehensive set of SW API functions
  - Improved Graphical User Interface for Windows 98, 2000, (XP)

- Project Kick-Off two days ago
- SpaceWire PC Card “Release 1” available Q1/2004

SpaceWire PC Card Details

- Wildcard™ PC Card
- LVDS Interface Board
- FPGA Architecture
- Software API Functions
- Application Software for Windows

Wildcard™ PC Card

- Type II PC Card from *Annapolis Micro Systems Inc.*
- Features:
  - Xilinx Virtex XCV300E re-programmable FPGA device
  - 32 bit, 33MHz Cardbus Interface
  - Programmable Clock Generator
  - 2x 256kByte SRAM devices
  - 2x 15-pin I/O connectors (single-ended I/O)
  - Windows 98, 2000, Linux drivers and API
  - Current consumption monitoring via software

Wildcard™ PC Card (cont.)

- Cardbus controller as a separate device
- Internal LAD bus between Cardbus controller and Processing element (FPGA)
- User interfaces (in VHDL) provided for LAD bus, I/Os and memories
- FPGA configured via Cardbus I/F by using a dedicated API function

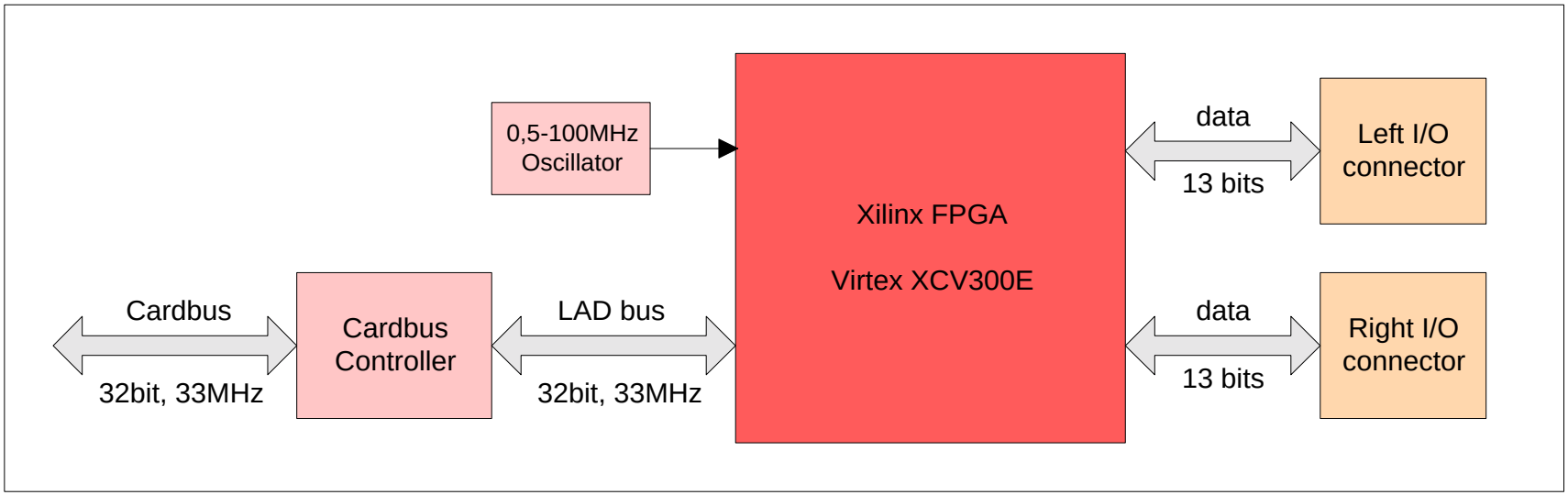

LVDS Interface Board

- Custom-made board with LVDS tranceivers and SpaceWire connectors
- Converts FPGA single-ended signals to LVDS differential signals
- Electrical and mechanical design and manufacture subcontracted to *Dienst Technische Ondersteuning*-department of the Technical University of Delft

- Mechanical connection to PC card supported with a rail structure
- SpaceWire connectors not attached directly to PCB

LVDS Interface Board (cont.)

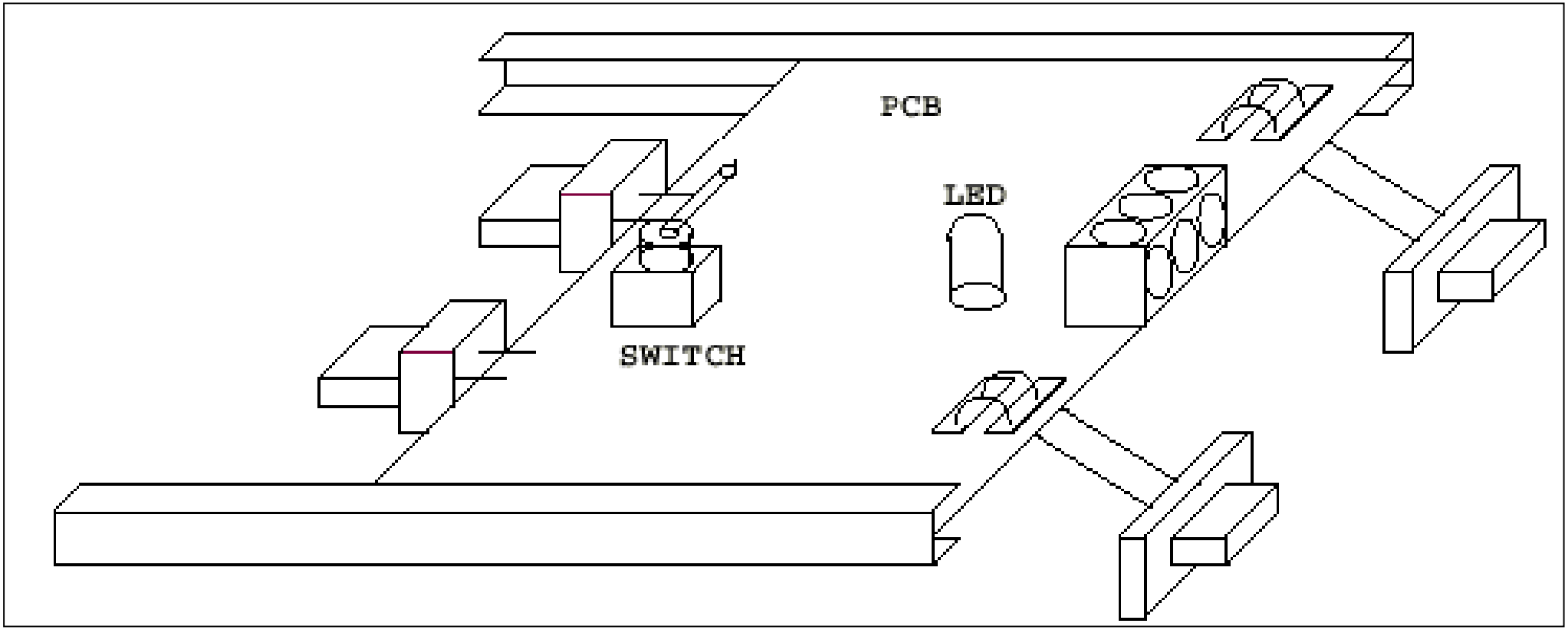

FPGA Architecture

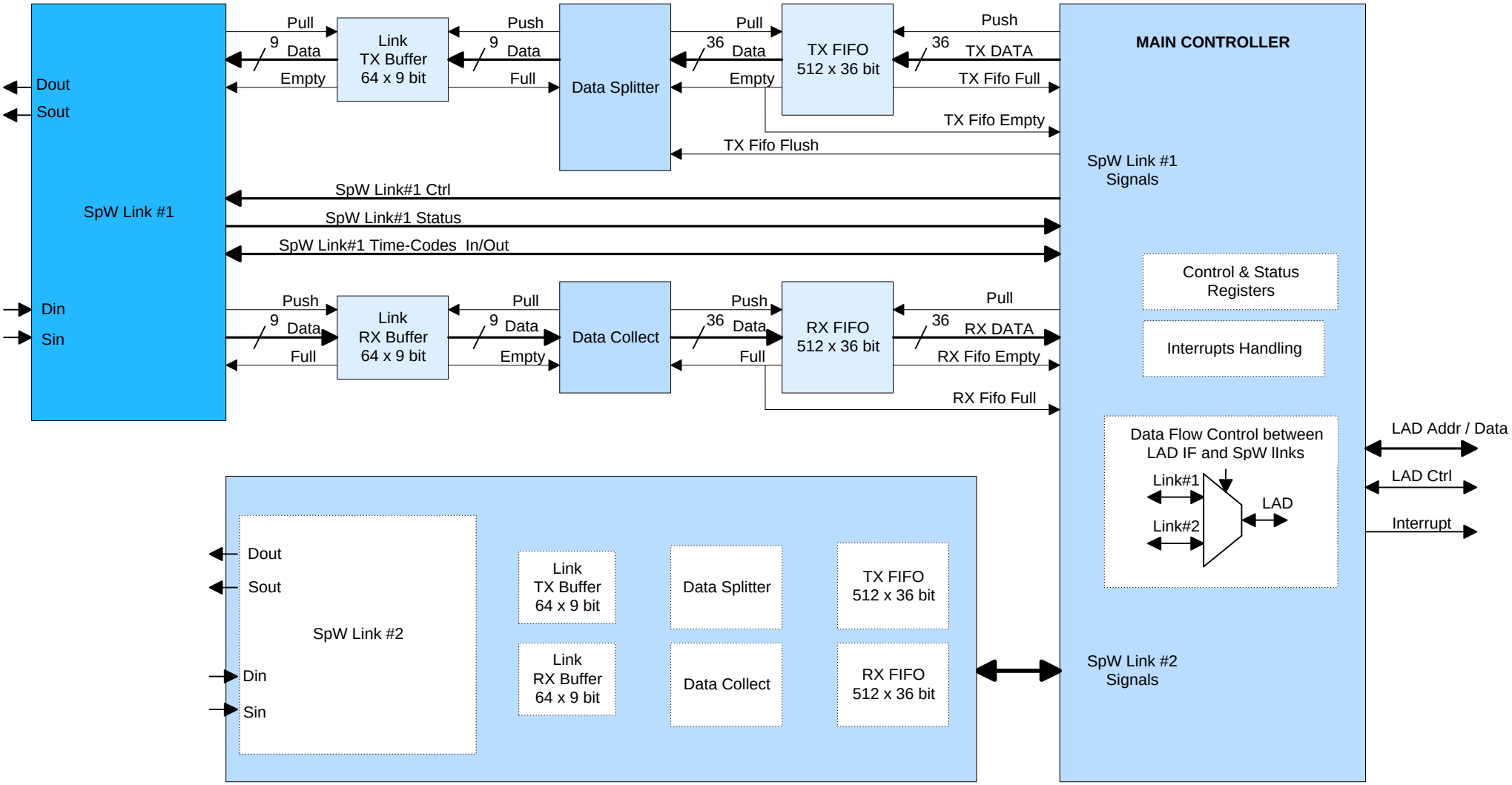

HW/SW Interface

Address	Register Description	Width (bits)	Type	Reset Value
0x0200h	PE Management Register	16	r / w	0000 h
0x0204h	PE Interrupt Register	32	r	00000000 h
0x022Ch	PE Interrupt Mask Register	32	r / w	00000000 h
0x0400h	SpaceWire Link #1 Management Register	32	r / w	00000000 h
0x0404h	SpaceWire Link #1 Status Register	16	r	0000 h
0x0438h	SpaceWire Link #1 Time-Code Register	16	r / w	0000 h
0x0450h	SpaceWire Link #1 **data read** address	32	n/a	n/a
0x0460h	SpaceWire Link #1 **data write** address	32	n/a	n/a
0x0800h	SpaceWire Link #2 Management Register	32	r / w	00000000 h
0x0804h	SpaceWire Link #2 Status Register	16	r	0000 h
0x0838h	SpaceWire Link #2 Time-Code Register	16	r / w	0000 h
0x0850h	SpaceWire Link #2 **data read** address	32	n/a	n/a
0x0860h	SpaceWire Link #2 **data write** address	32	n/a	n/a

HW/SW Interface (cont.)

Interrupts handling:

- One Interrupt line from PC card to the host PC.
  Status of this interrupt can be checked with two different API functions, *IntQueryStatus* or *IntWait*
- Any single bit set in the FPGA Interrupt register will activate the interrupt to the PC
- Any or all interrupts can be masked

Interrupts can be generated when :

- Link error detected
- EOP marker Received
- Data received (RX Fifo not empty)
- RX / TX Fifo is full
- Time-Code Received
- …

Software API Functions

- Comprehensive set of API functions for SpaceWire implementation of the Wildcard™
- Built on top of the original Wildcard API functions
- Available for Win98, 2000, (XP) and also Linux
- Divided into two groups:
  - Generic SpaceWire functions
  - PC Card related functions
- Generic SpaceWire functions designed to have similar syntax (or even identical) with SW functions of other SpW products
  - → Possible ESA or SpW Working Group recommendations taken into account

Software API Functions (cont.)

- Generic SpaceWire API functions
  - *SpW_Return* **SpW_LinkStart** (uint *LinkID*)
  - *SpW_Return* **SpW_LinkStop** (uint *LinkID*)
  - *SpW_Return* **SpW_AutoStart** (uint *LinkID,* boolean *Enable*)
  - *SpW_Return* **SpW_SetLinkSpeed** (uint *LinkID,* long uint *LinkSpeed*)
  - *SpW_Return* **SpW_SetTimeCode** (uint *LinkID,* long uint **BufferPointer*)
  - *SpW_Return* **SpW_TransmitTimeCode** (uint *LinkID)*
  - *SpW_Return* **SpW_TransmitPackets** (uint *LinkID,* long uint **BufferPointer,* long uint *nPackets,* long uint *PacketSize*)
  - *SpW_Return* **SpW_OpenInfinitePacket** (uint *LinkID)*
  - *SpW_Return* **SpW_TransmitData** (uint *LinkID,* long uint **BufferPointer*)
  - *SpW_Return* **SpW_CloseInfinitePacket** (uint *LinkID)*
  - *…*

Software API Functions (cont.)

- PC Card related functions
  - *Void* **SpWCard_Power** (boolean *Enable*)
  - *SpW_Return* **SpWCard_Initialise** (char *Filename, float *ClkFreq*)
  - *SpW_Return* **SpWCard_ReadInterrupts** (long uint **BufferPointer*)
  - *SpW_Return* **SpWCard_MaskInterrupts** (long uint **BufferPointer*)
  - *SpW_Return* **SpWCard_FPGAreset** (boolean *Enable*)
  - *SpW_Return* **SpWCard_InterruptStatus** (boolean **Status*)
  - *SpW_Return* **SpWCard_InterruptWait** (long uint *TimeMilliSec*)
  - …

Application Software

- Under Development
- Designed with Visual C++ and targeted for Win98, 2000, (XP)
- Includes e.g. the following features:
  - Transmit / Receive packets
  - Start / Stop transmission of a packet of unknown length
  - Transmit / Receive Time-Codes
  - Receive packets
  - Receive data continuously
  - Stop the reception of data
  - Transmit / Receive files
  - Transmit / Receive a file ID, which would contain a file name and extension type, thus allowing a reconstruction of the transmitted file at the receiving end
  - Optional Checksum calculation for receive / transmit data and associated error reporting
  - …

Conclusion

New addition to SpaceWire EGSE product family:

- SpaceWire PC card (PCMCIA) with two SpaceWire links
  - Based on commercial PC card
  - SpaceWire links compliant with the latest standard
  - Comprehensive set of SW API functions for Windows and Linux
  - Application software included

- Available Q1-Q2/2004 via ESTEC

Thank You for your attention!
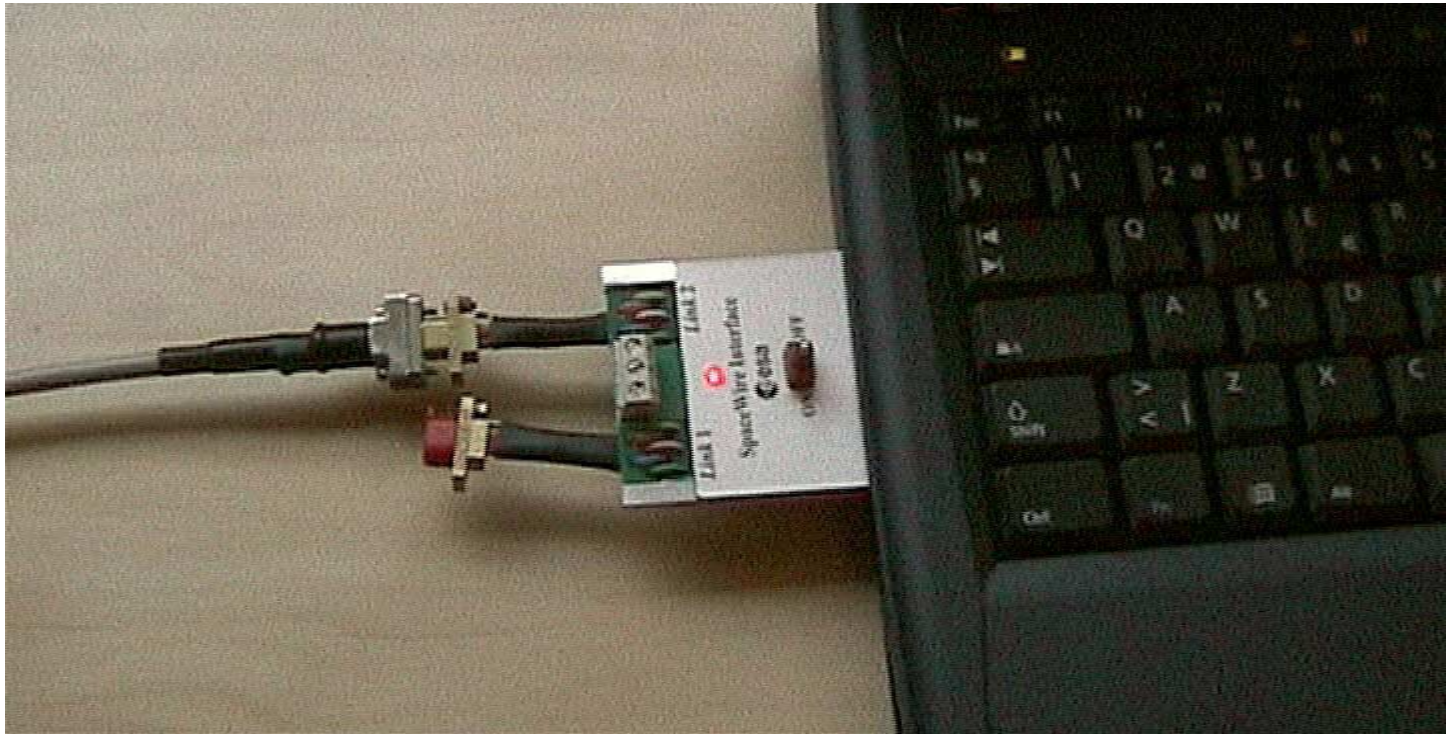
Jaakko Toivonen / Patria New Technologies OY, Space Electronics
Jaakko.Toivonen@patria.fi