"ISWS", International SpaceWire Seminar 2003 - November 4-5, 2003, ESTEC Noordwijk, The Netherlands

Laben Current Application of SpaceWire Technology

L. Foglia[1], G. Aranci[1], M. De Meo[1]

[1] Laben S.p.A.- a Finmeccanica Company - 20090 Vimodrone (Milano), Italy
S.S. Padana Superiore 290

HICDS-Processor Module

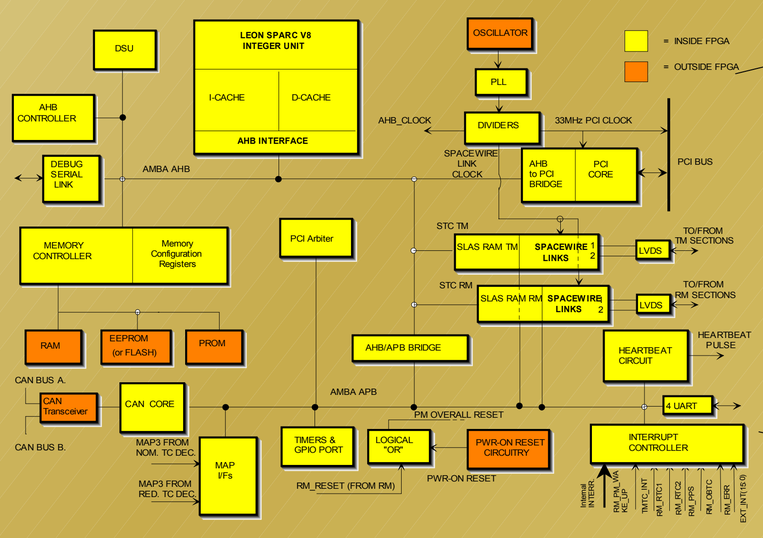

HICDS DCU Core HW

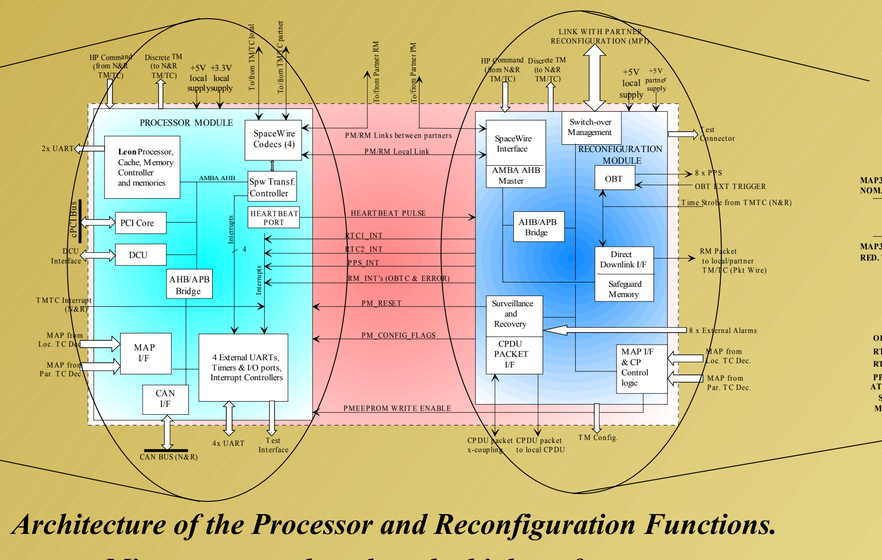

HICDS - Reconfiguration Module

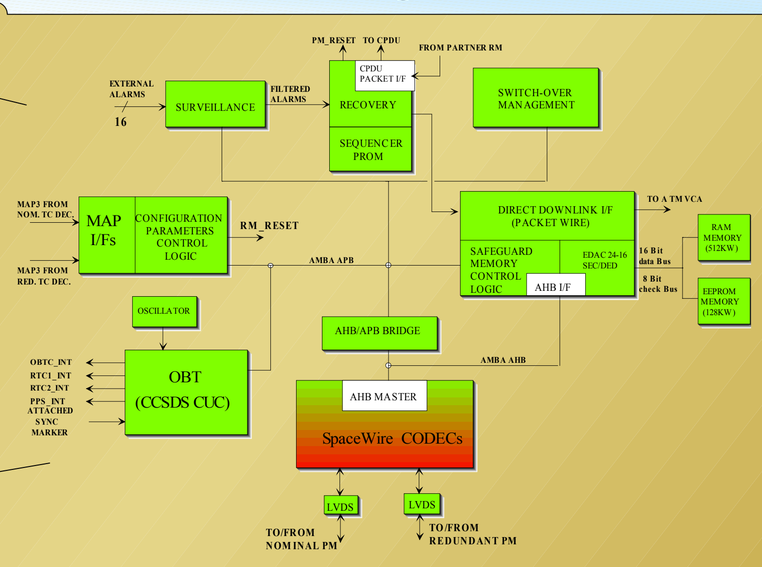

Processor Module

Four SpaceWire channels provides communication with

2 TMTC and 2 RM Modules

Architecture of the Processor and Reconfiguration Functions.

Microprocessor based on the high performance

LEON-2 Fault Tolerant (FT) Computer.

The Processor, all the relevant functions and interfaces are integrated into a single System-on-Chip.

The Reconfiguration Function includes all the hardware for internal and external alarms monitoring, execution of ths associated recovery procedures and the "protected resources".

Reconfiguration Module

Two SpaceWire channels provides communication with Local and Partner PM Modules.

GAIA PDHS

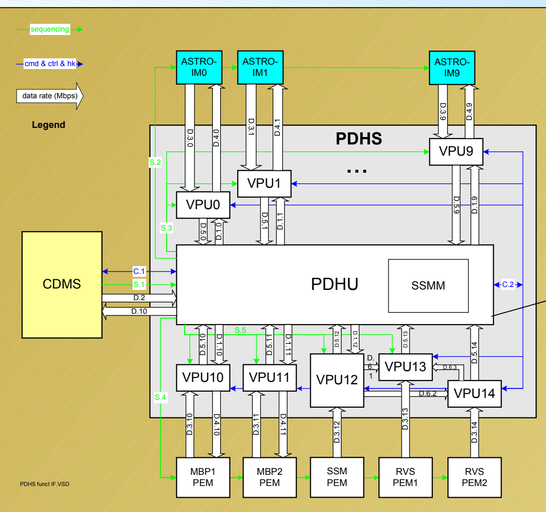

Payload Data Handling Unit (PDHU) as part of the GAIA Payload Data Handling System (PDHS).
The PDHU commands and controls the complete PDHS, the ASTRO-Instrument, and the SPECTRO-Instrument including the Radial Velocity Spectrometer.

GAIA PDHU

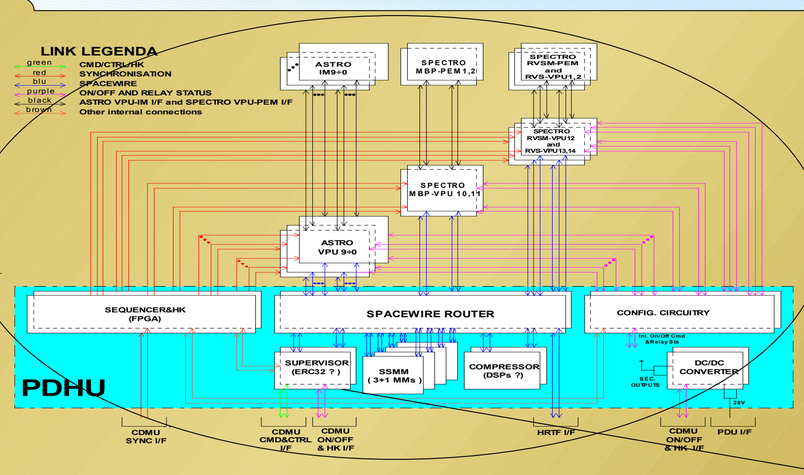

The PDHU includes the following modules:

- *Supervisor module*
- *Self Redundant SpaceWire Switching Matrix*
- *DC/DC converter*
- *Data Compressor module*
- *SSMM (3 +1 Memory modules).*

GAIA PDHU - Supervisor Module

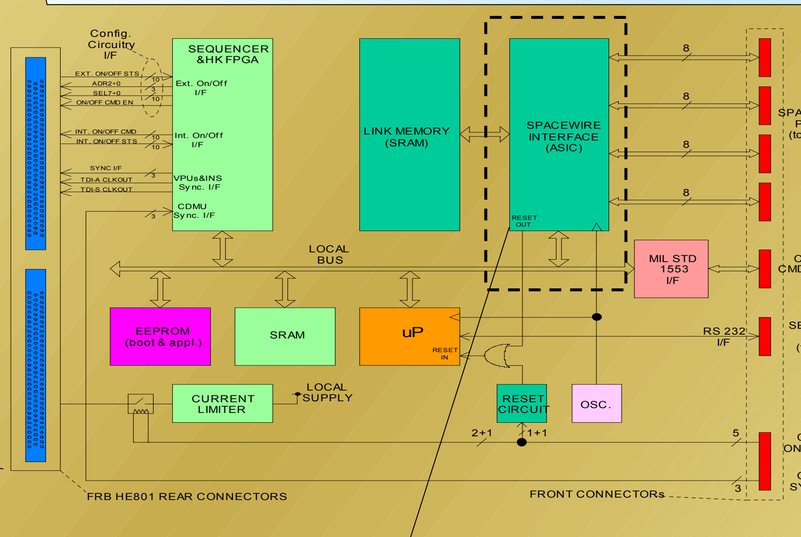

GAIA PDHU- SpaceWire Switching Matrix

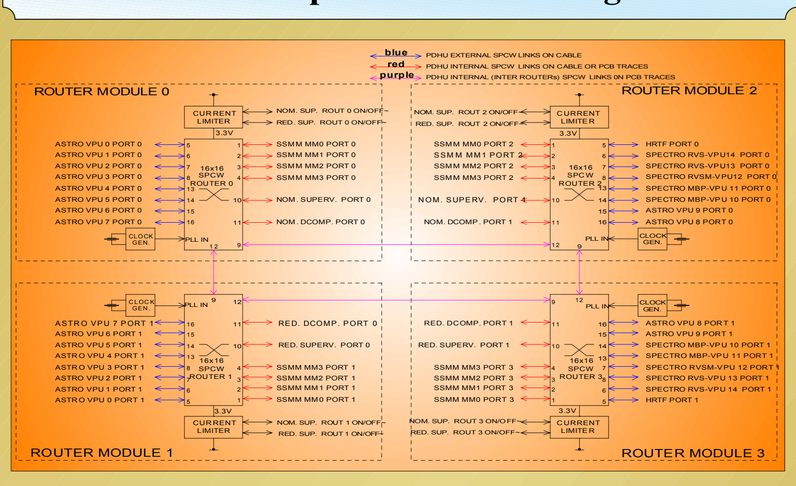

**4 fully independent MMs.*
**Enhanced, nom. and degraded mode operations:*
1 configuration with 4 routers active (enhanced).
4 configurations with 3 routers active (enhanced).
4 of 6 configurations with 2 routers active.
**Routing is improved using logical addressing and group adaptive routing thanks to internal alternative circular path.*
The overall network throughput can be concentrated to/from one MM only.

GAIA PDHU- Memory Module

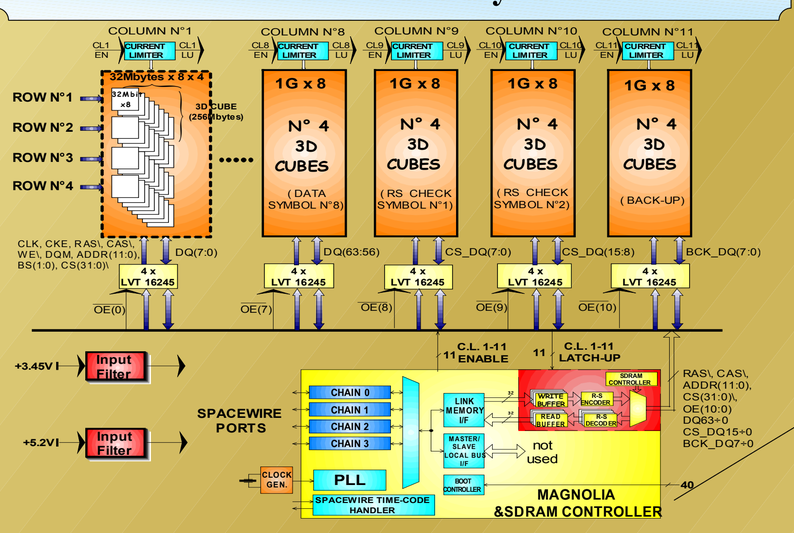

With a proper SpaceWire I/F, the MM behaves as an independent and remotely controllable SpaceWire terminal

GAIA PDHU- Supervisor SpaceWire I/F

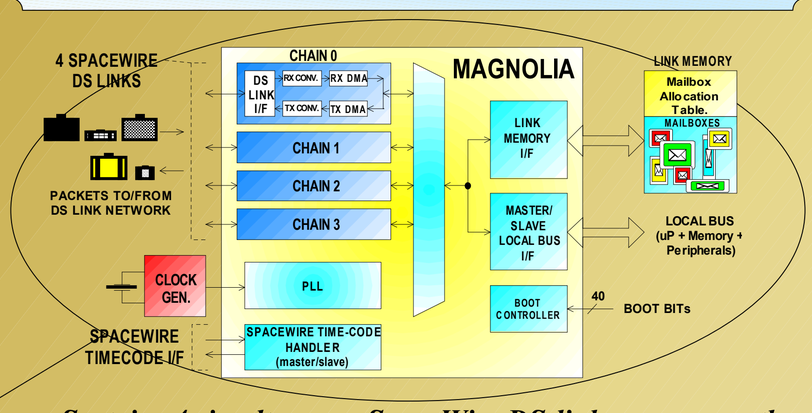

•Sustains 4 simultaneous SpaceWire DS-links, concurrently shared among up to 2^16 data flows (in each direction).

•All its functions can be locally (Supervisor) or remotely controlled (MM).

•Allows to remotely control file operations like: "load a file", "save a file" and "move a file".

•Allows to remotely program MAT and its internal registers.

•SSMM (3 +1 Memory modules).