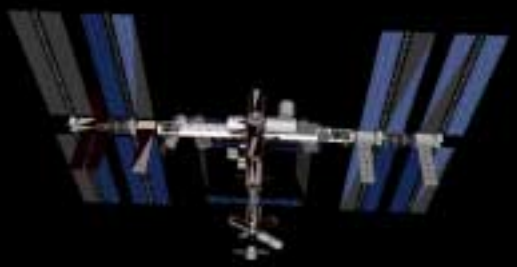

Architecture for using SpaceWire links in a bus configuration

J. Lamorie, E. Edwards, M. Hubert, F. Ricci
Xiphos Technologies Inc.

M. Doyon
Canadian Space Agency

ESTEC, 2003

xiphos.ca

Guiding Concept

Integrate fault-tolerant concepts in SpaceWire networks

xiphos.ca

Overview

- Fault-Tolerant Network Concepts
- SpaceWire & Fault-Tolerant Networking
- SpaceWire Multiple Access Schemes
- SpaceWire Internetworking
- Demonstration Application

xiphos.ca

Fault Tolerance

- Graceful accommodation of faults
- Fault detection, isolation, resolution
- Layered system required

xiphos.ca

Network Advantages

- Networking helps provide layering
- Permits distribution of computing elements (functional redundancy)
- Dramatically reduces wiring harness mass
- Rapid functional prototyping (standards based)

xiphos.ca

Fault-Tolerant Network

- Architecture required that allows:
  - Broadcast ability
  - Protection against failed nodes
  - Protection against failed connections

xiphos.ca

Fault-Tolerant Network

- Bus network:
  - Provides broadcast ability
  - Cannot remotely isolate nodes
  - No protection against failed connections

xiphos.ca

Fault-Tolerant Network

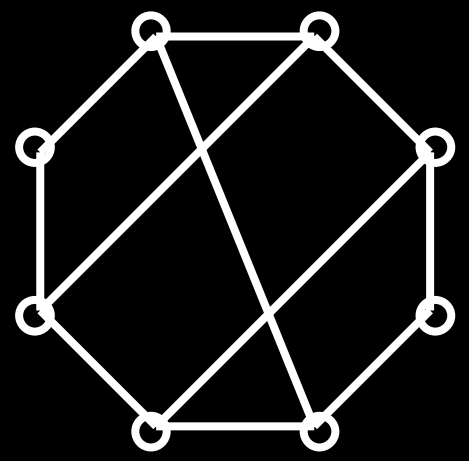

- Mesh Network
  - Allows isolation of nodes
  - Complex routing algorithms presently used
  - Broadcast data is not typical mode of operation

xiphos.ca

Broadcast Mesh

- Combines the functionality of both.
- Relies on byte (symbol/subpacket)-forwarding.
- Simple rules allow dynamic route around failed links and nodes. No routing tables.
- Requires certain services from point-to-point link system.
- Each node has at least two endpoints for point-to-point links.
- Each node acts as a router.

xiphos.ca

Link Layer Requirements

- Point-to-point
- Detection of errors
  - Carrier loss
  - Bit-errors on octets
- Packet framing
- Error reporting
- SpaceWire offers all of these features up to the exchange level

xiphos.ca

Byte Forwarding

- Underlying principle is ‘byte-forwarding’
- **Sending:** When a node determines that it is permitted to send a packet on the network, it starts sending on all links

xiphos.ca

Byte Forwarding

- **Forwarding**
  - Every node listens on all ports and once a packet starts to arrive, designates the initial receive port as the ‘source’ port.
  - Once a byte is correctly received from the source port,it is transmitted simultaneously on all ports, including the source port.
- A node does not forward a packet until the entire previous packet has been forwarded/received
- All nodes reflect what they receive, receipt of an EOP (framing) signal is required on every port

xiphos.ca

Closer View

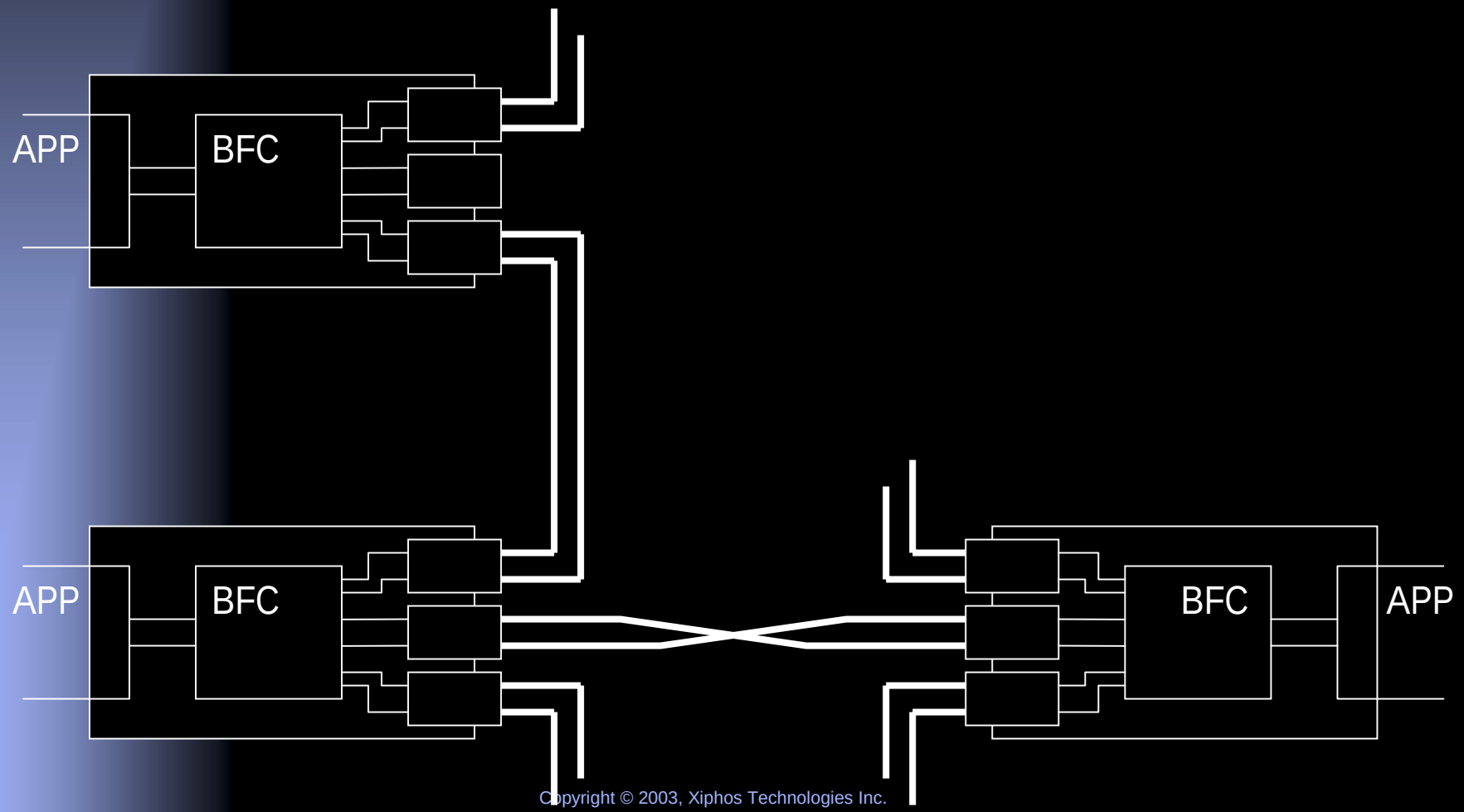

xiphos.ca

Application Sends

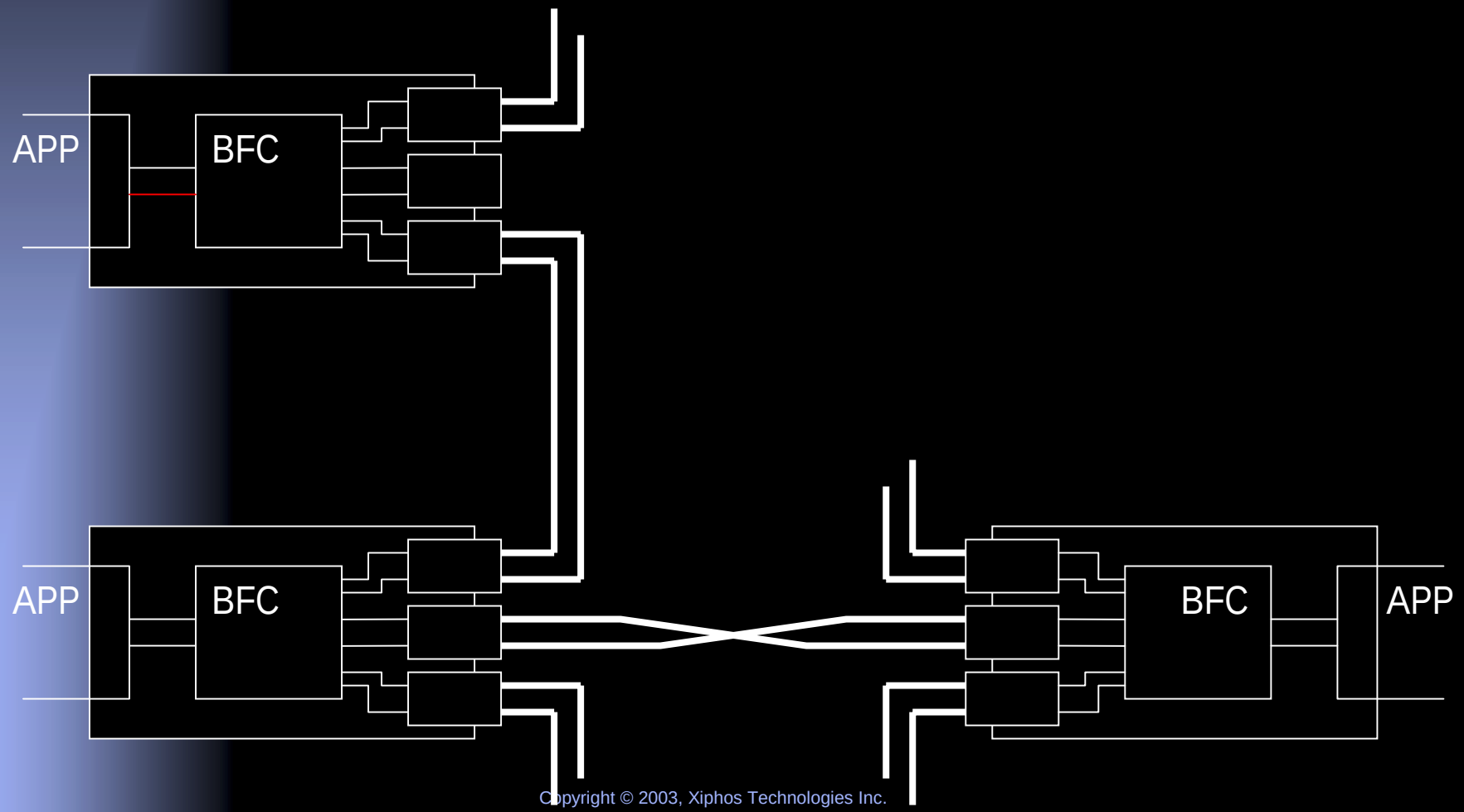

xiphos.ca

BFC Forwards

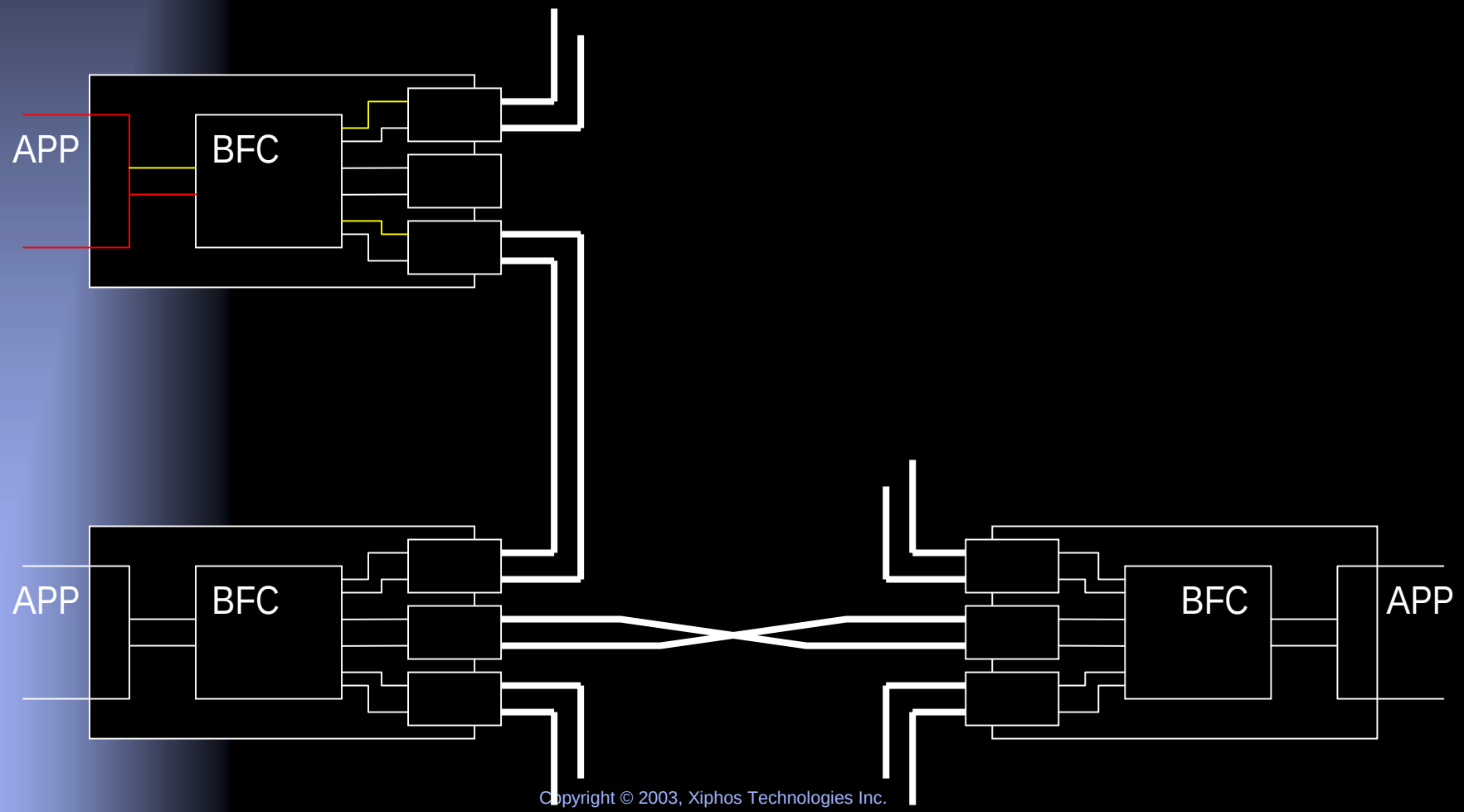

xiphos.ca

Links Send

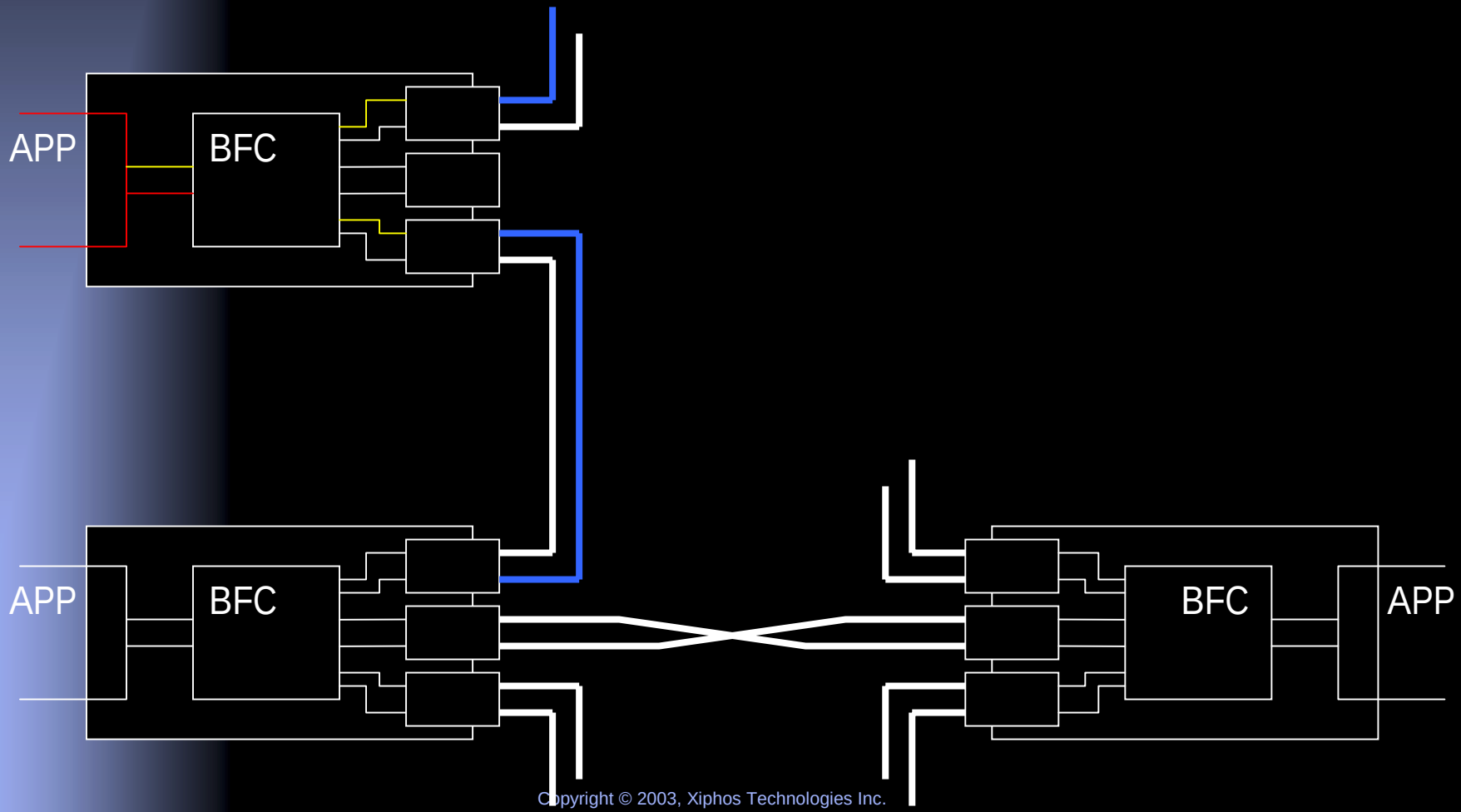

xiphos.ca

Source Link Established

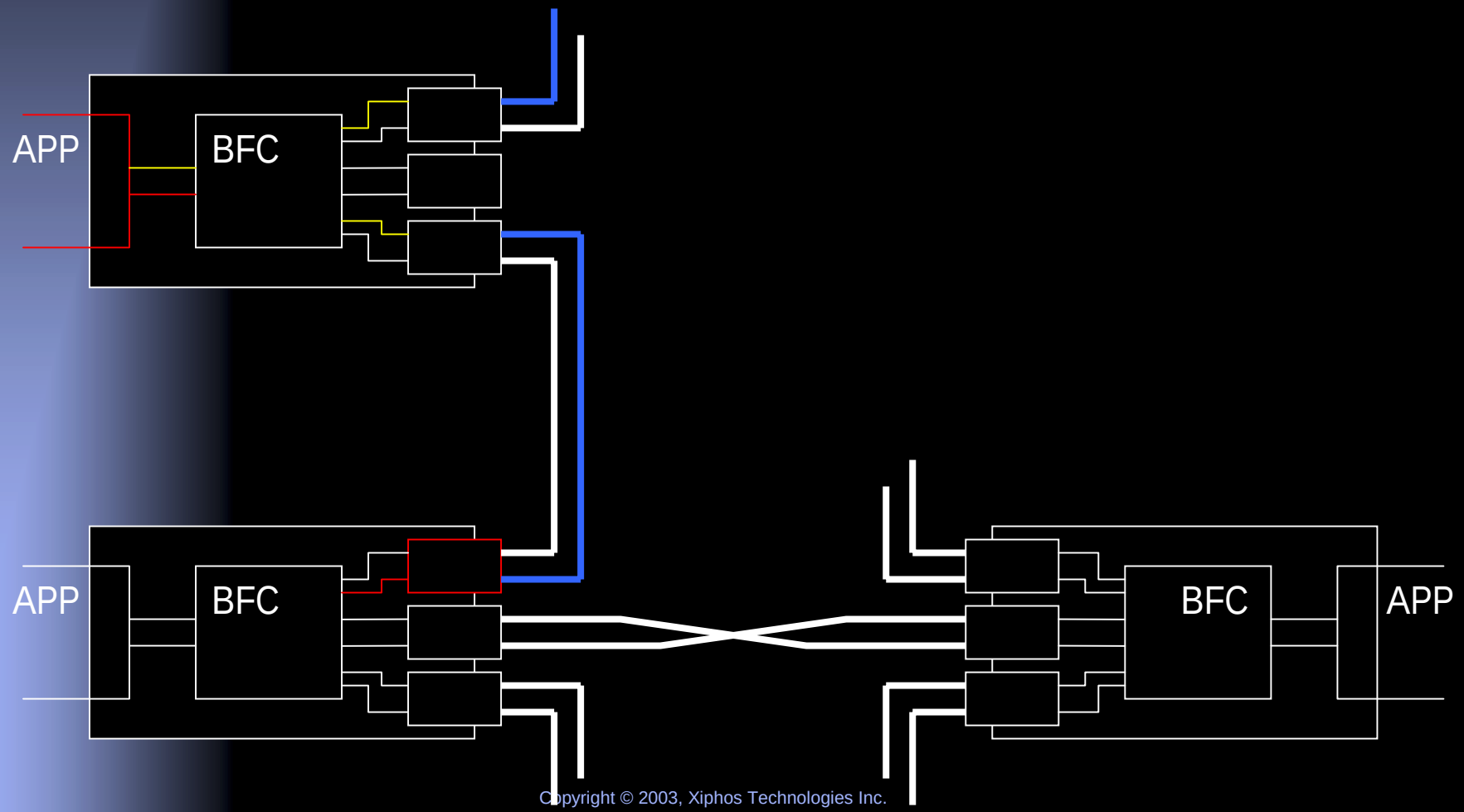

xiphos.ca

2nd BFC Forwards

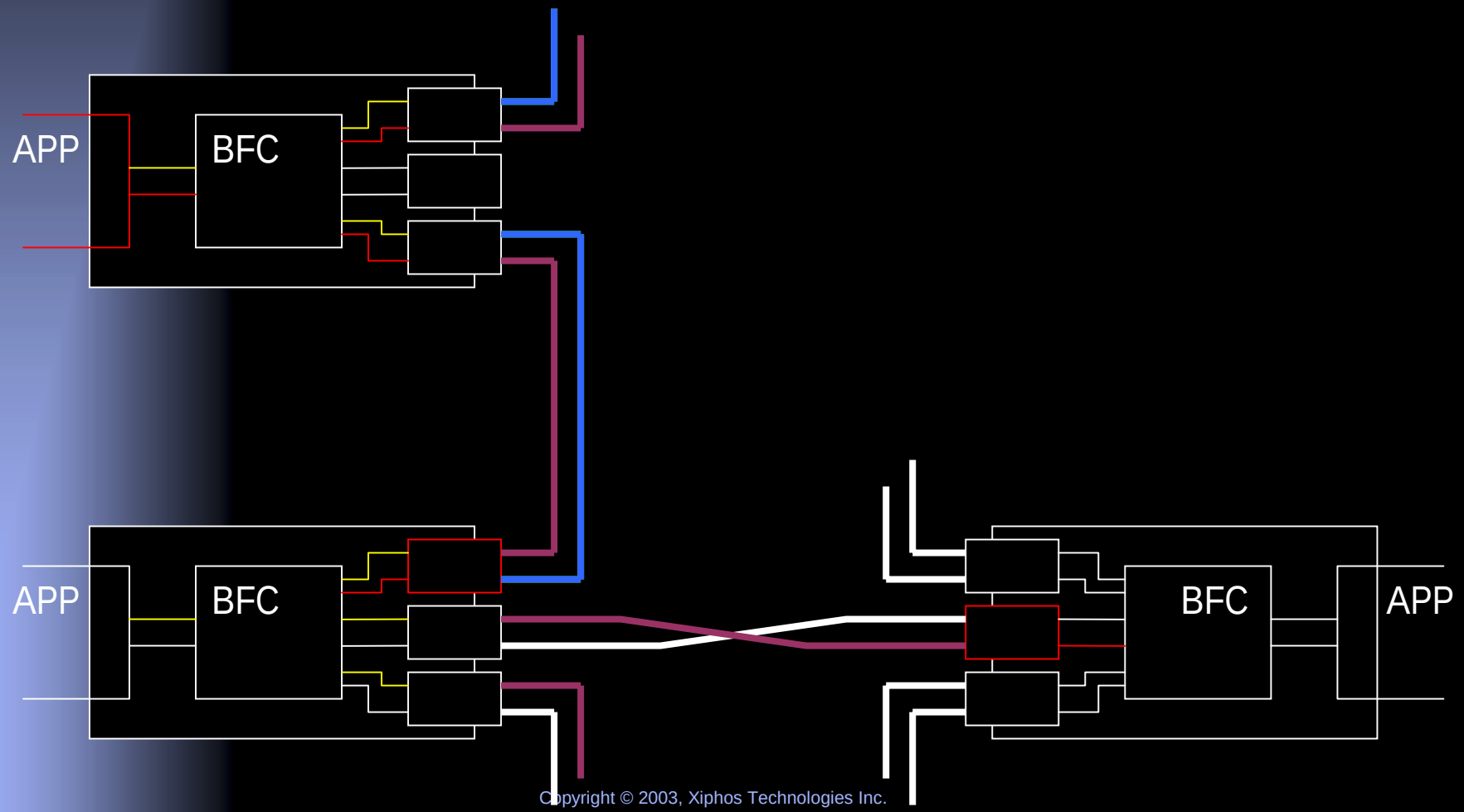

xiphos.ca

3rd BFC Forwards

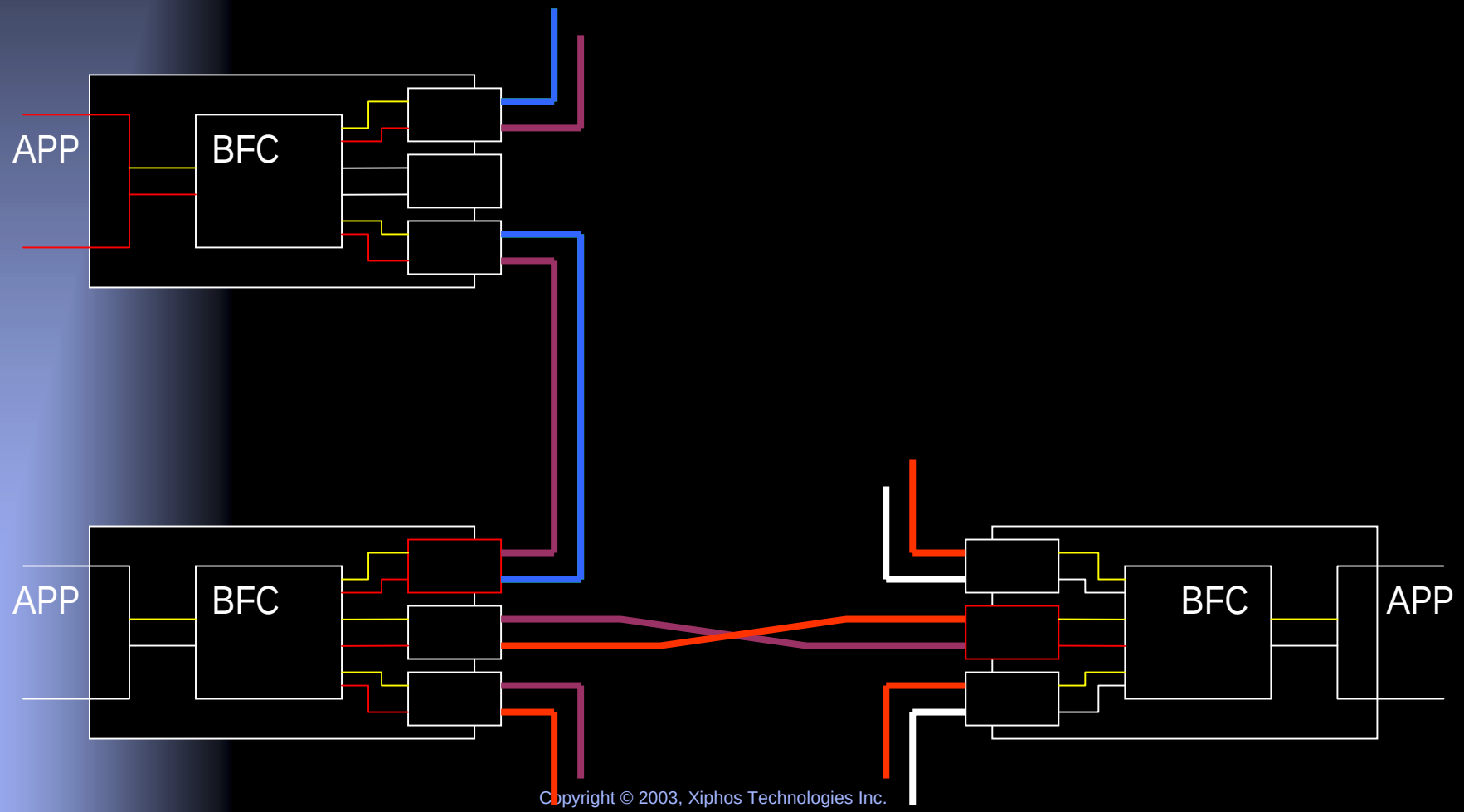

xiphos.ca

4th BFC Forwards

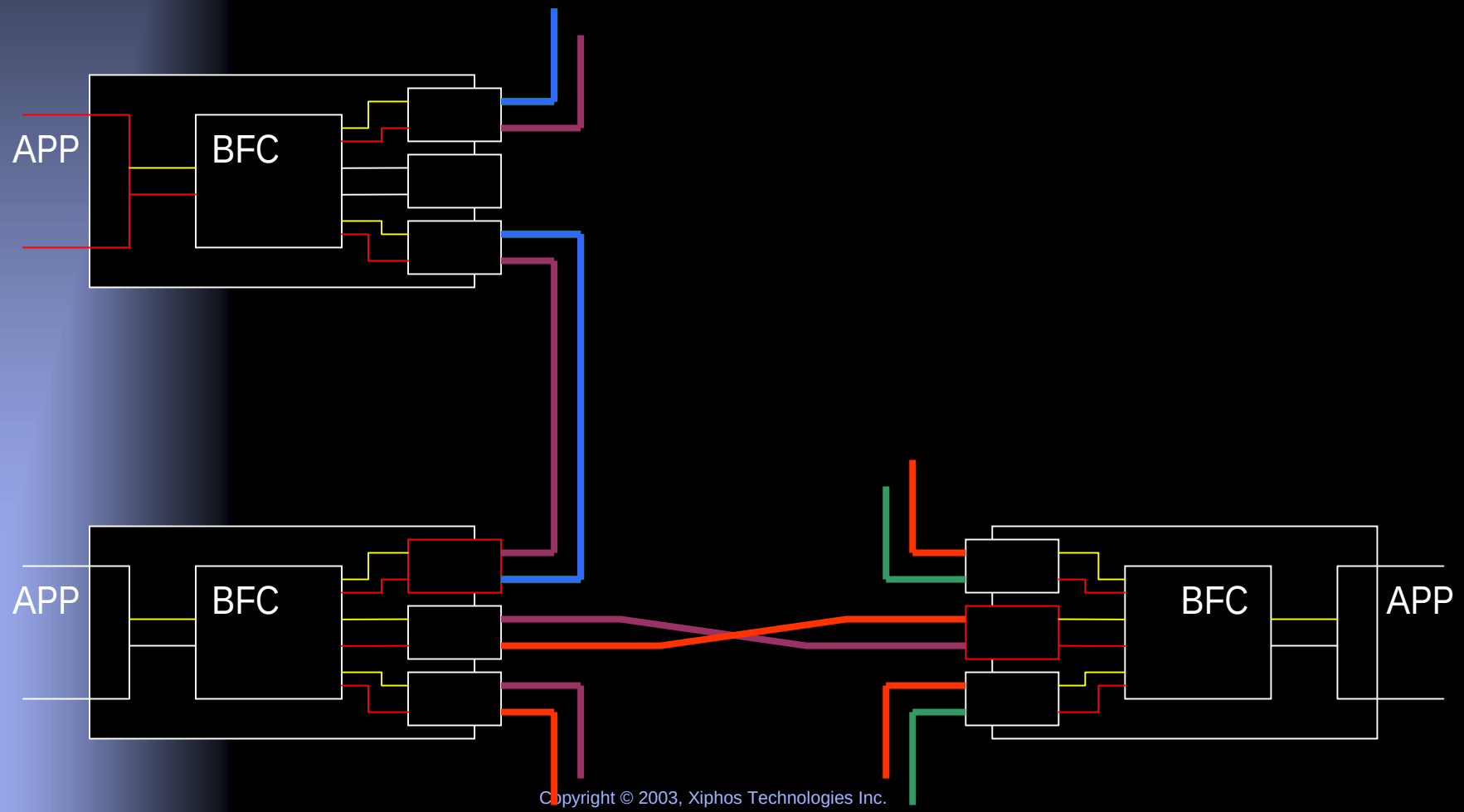

xiphos.ca

Chordal Ring Example

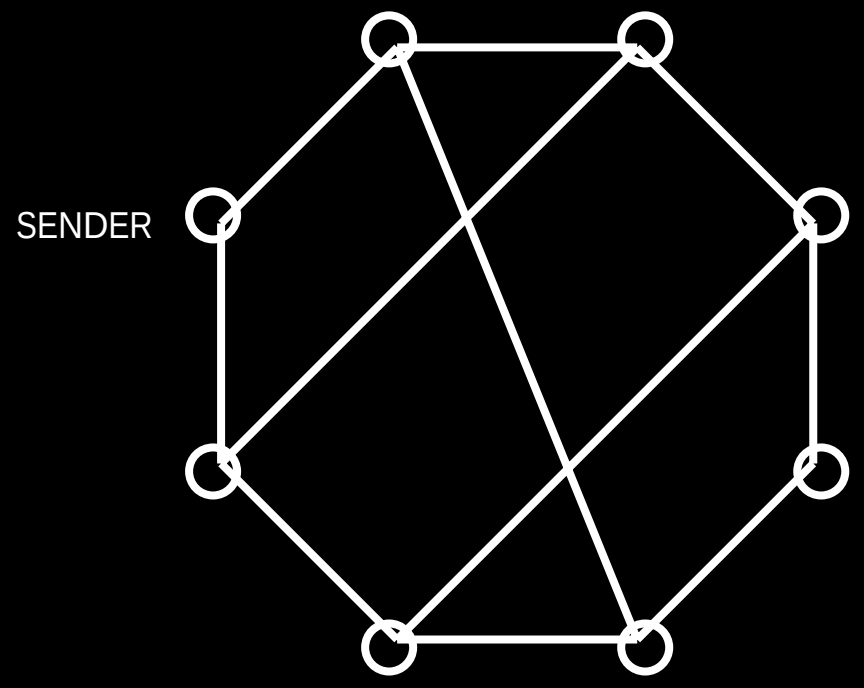

xiphos.ca

Chordal Ring Example

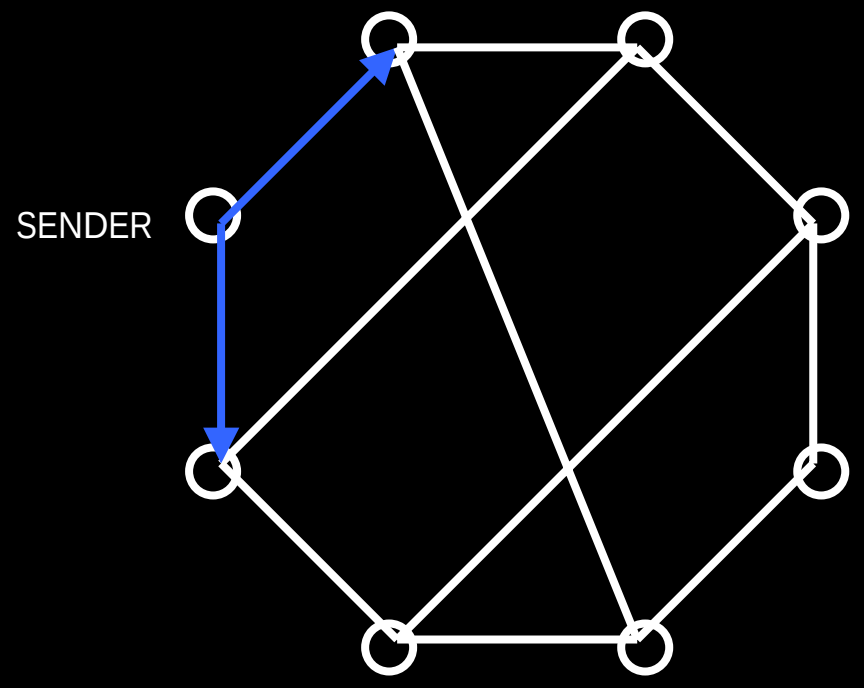

xiphos.ca

Chordal Ring Example

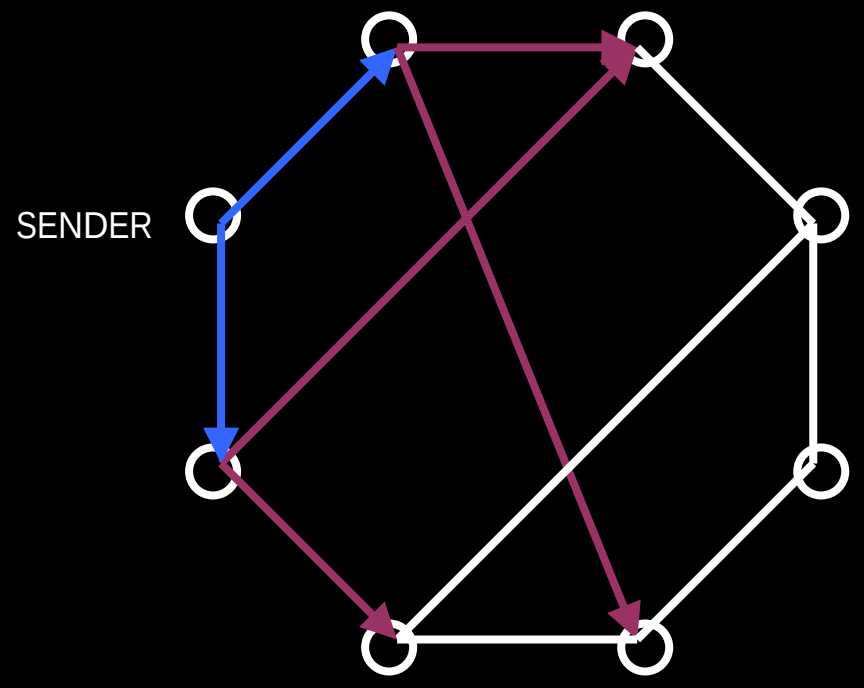

xiphos.ca

Chordal Ring Example

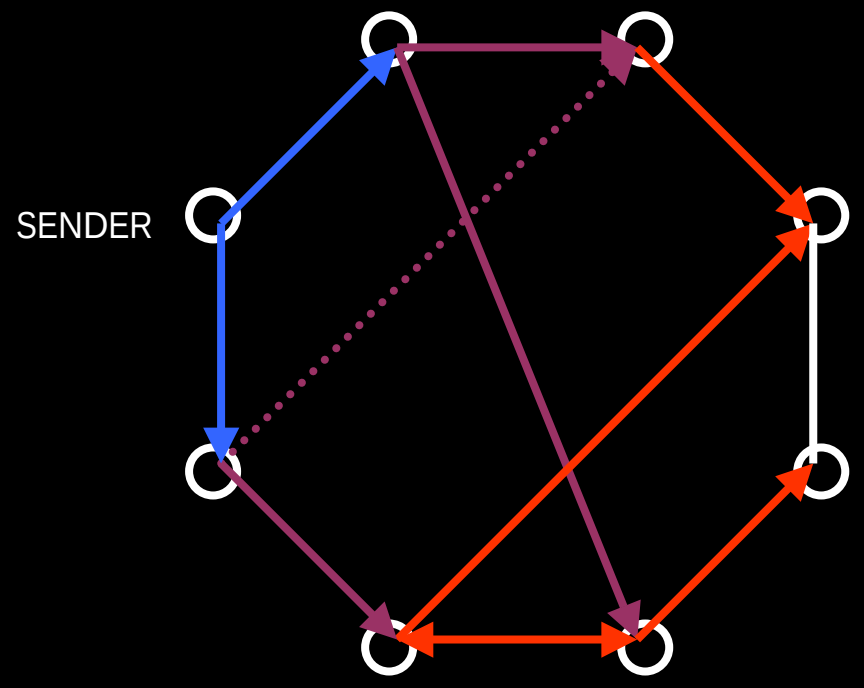

xiphos.ca

Chordal Ring Example

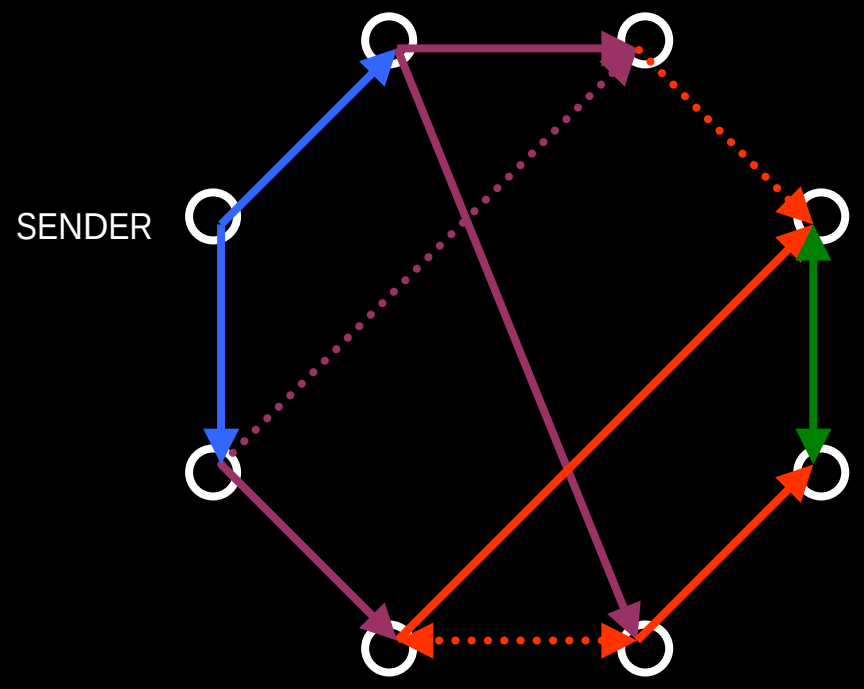

xiphos.ca

Chordal Ring Example

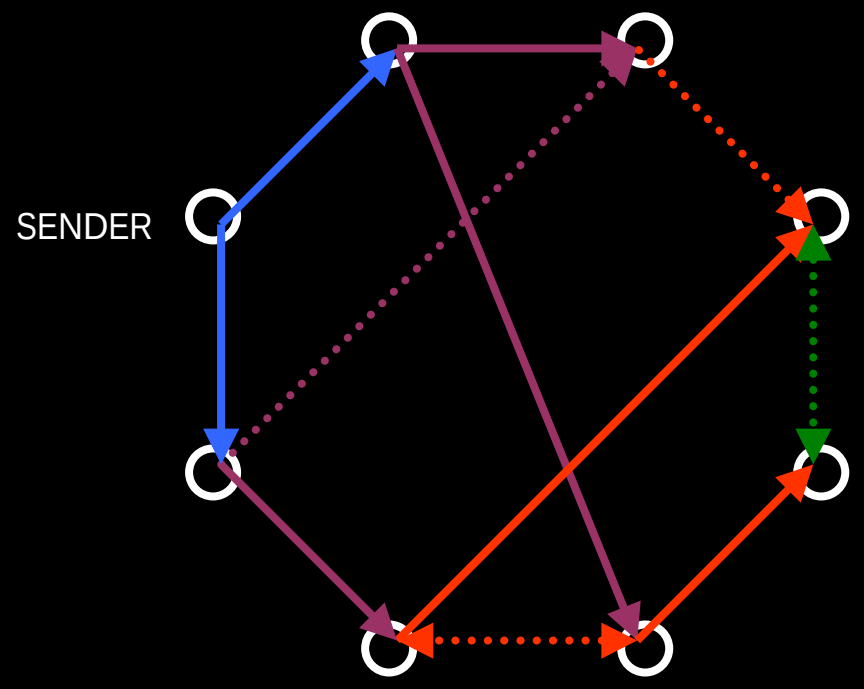

xiphos.ca

Failed Link

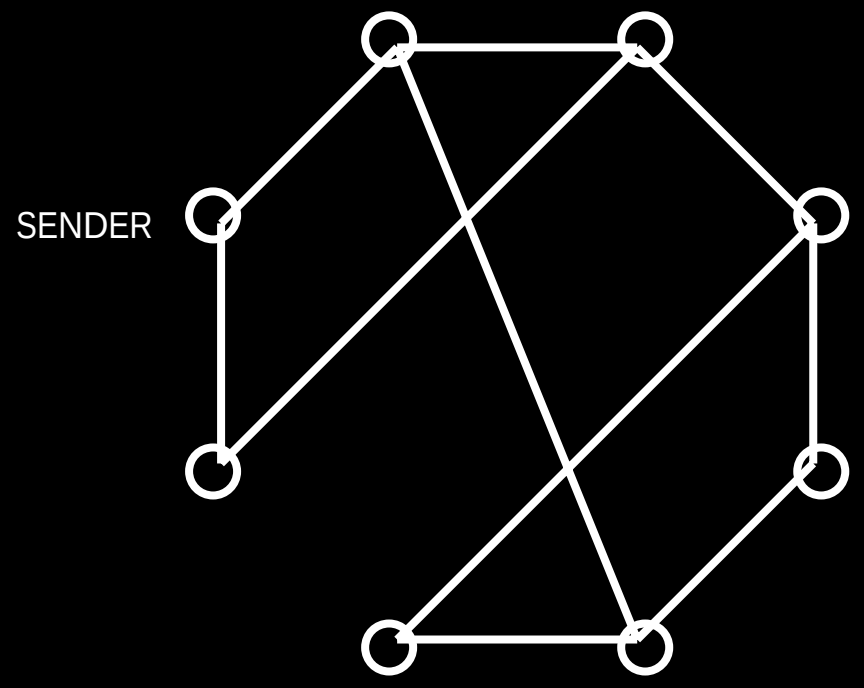

xiphos.ca

Failed Link

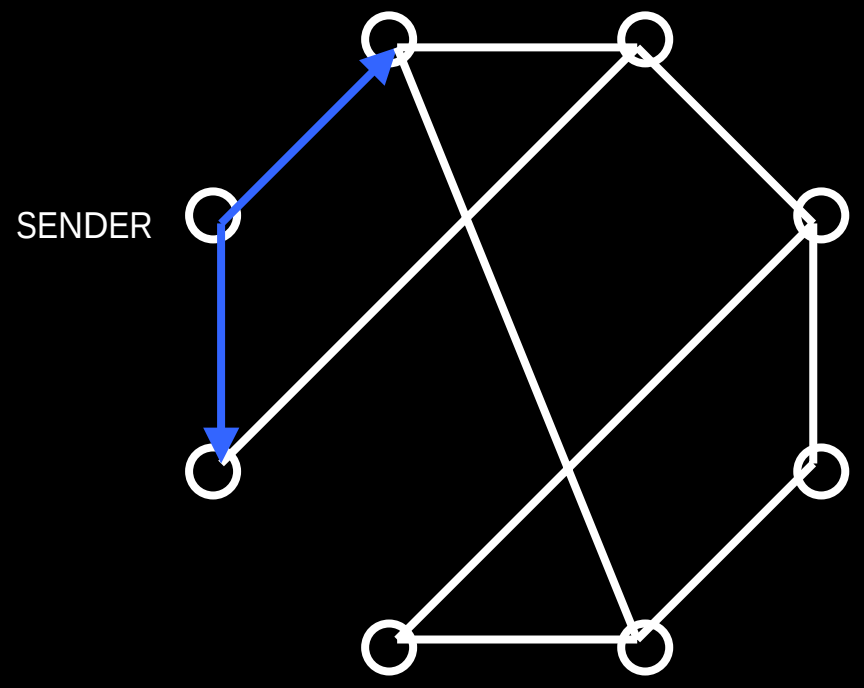

xiphos.ca

Failed Link

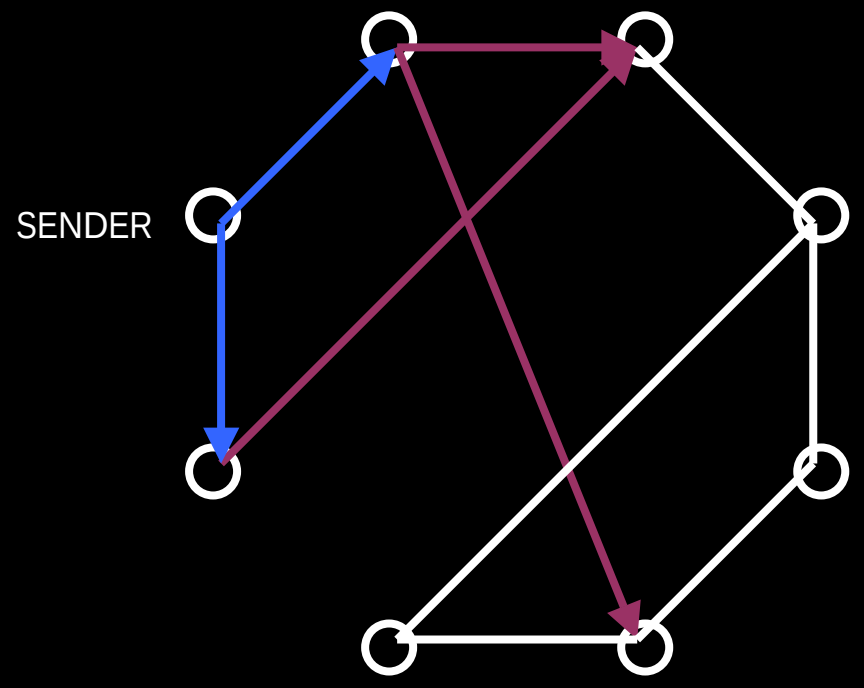

xiphos.ca

Failed Link

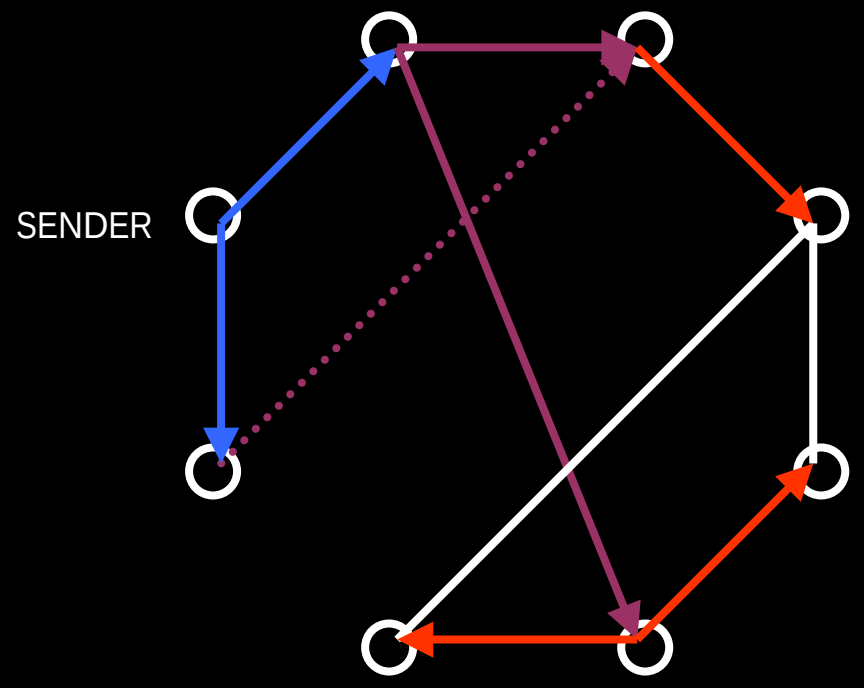

xiphos.ca

Failed Link

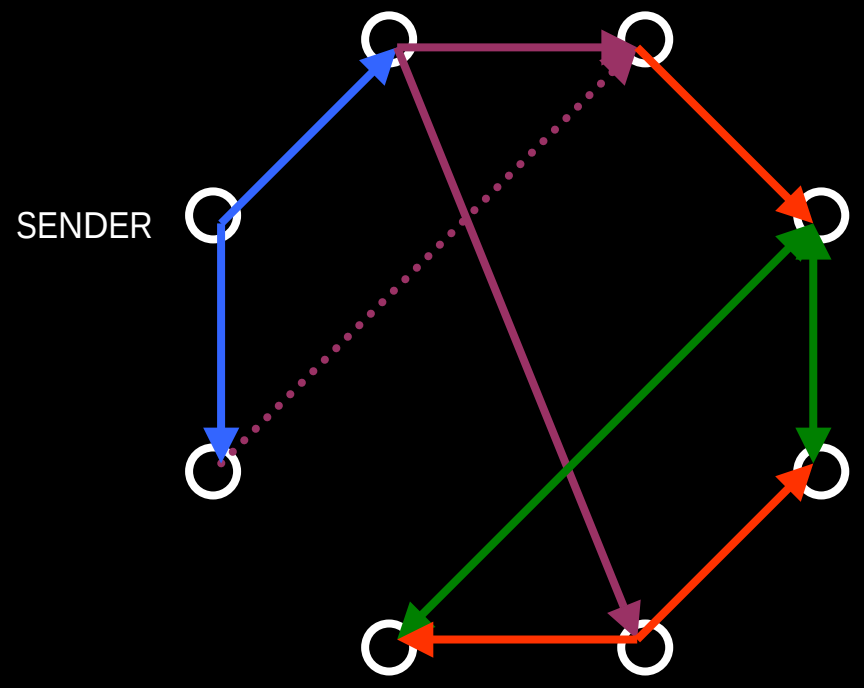

xiphos.ca

Failed Link

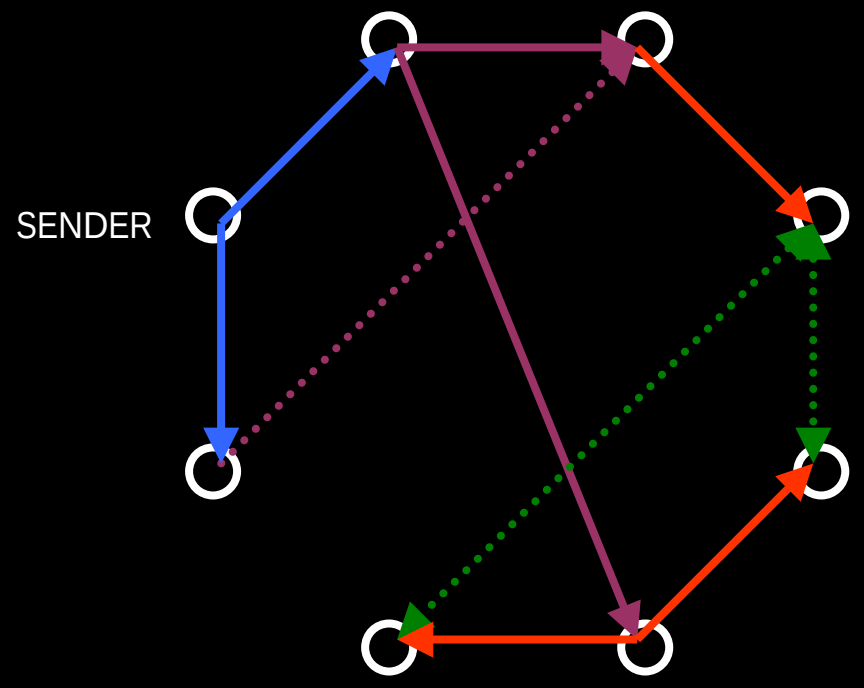

xiphos.ca

MAC Schemes

- Non-contention based MACs
  - Master-slave
  - Token ring
- Contention based MACs
  - Ethernet style
  - Packet collision detection

xiphos.ca

Internetworking

- Standard SpaceWire devices are not SpaceWire bus compatible
  - They do not forward incoming packets
  - They only expect to receive packets that are directed to them

Internetworking

- Solution : design a bridge with two functions:
  - Forward all incoming packets
  - Send to the standard device connected only packets that are directed to it

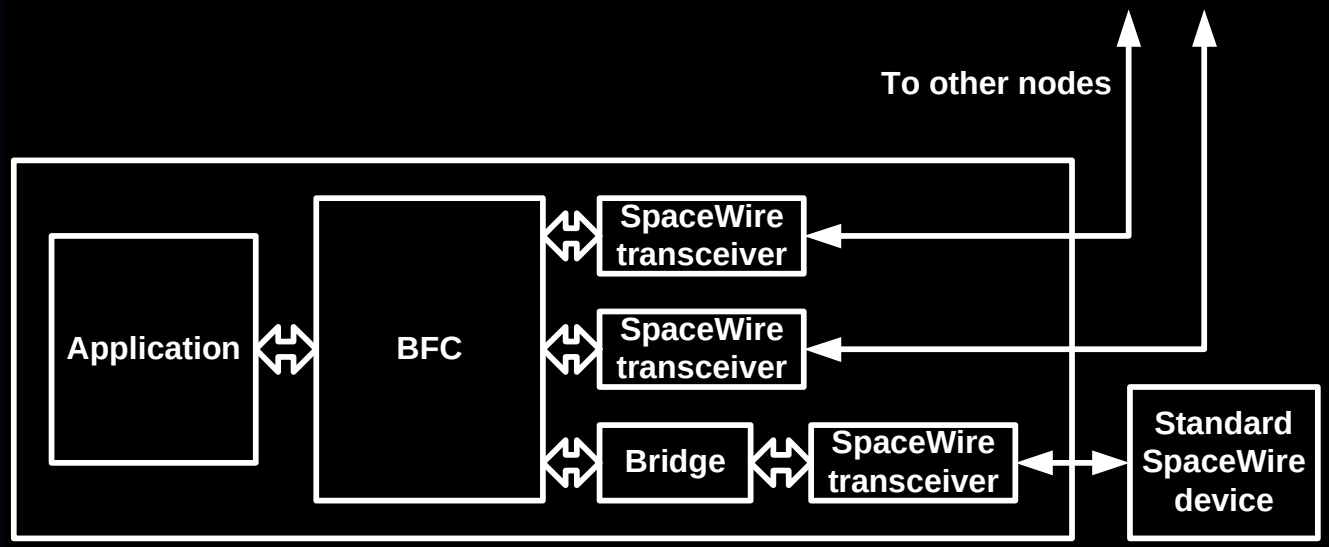

Internetworking

- Advantages of internetworking
  - May use less cabling resources
  - Provide SpaceWire bus advantages to standard devices

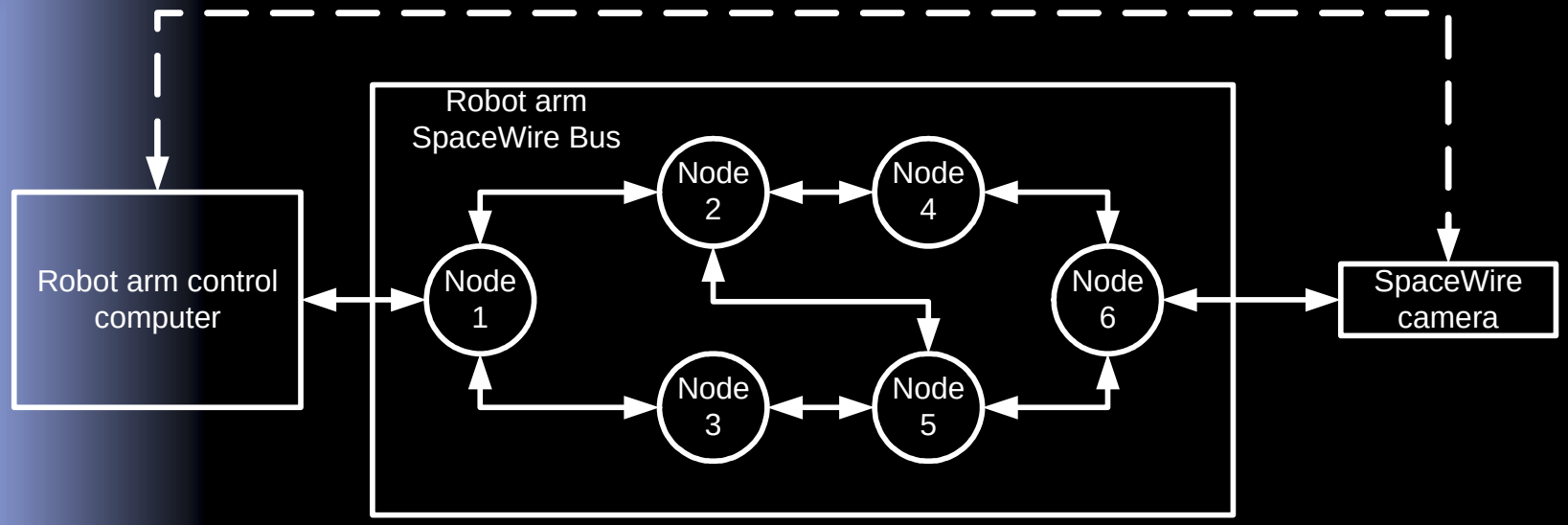

xiphos.ca

Demonstration Application

- SARAH
  - Three-digit robotic hand using two drive motors
  - Uses one Q5 as a computer node and two Q5s for motor control
  - A SpaceWire bus connects all Q5s together

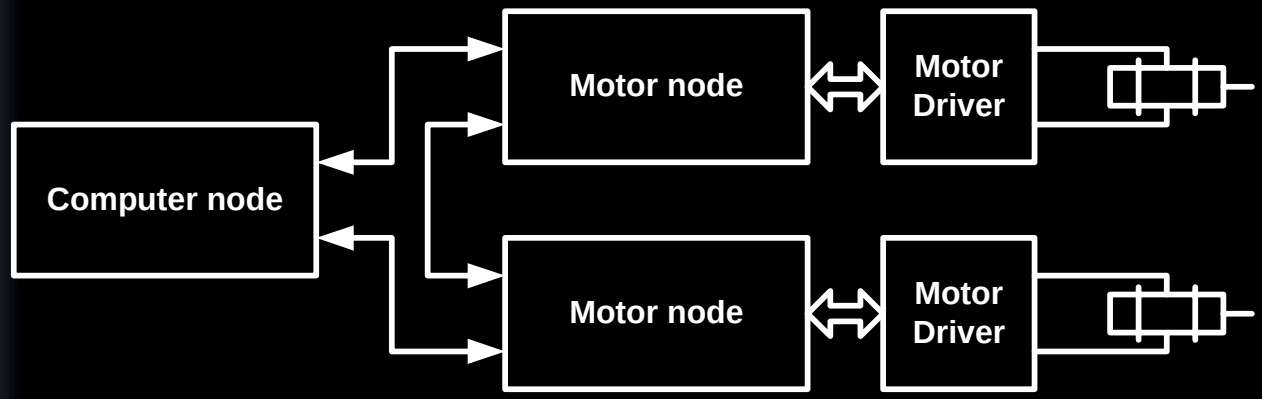

xiphos.ca

Demonstration Application

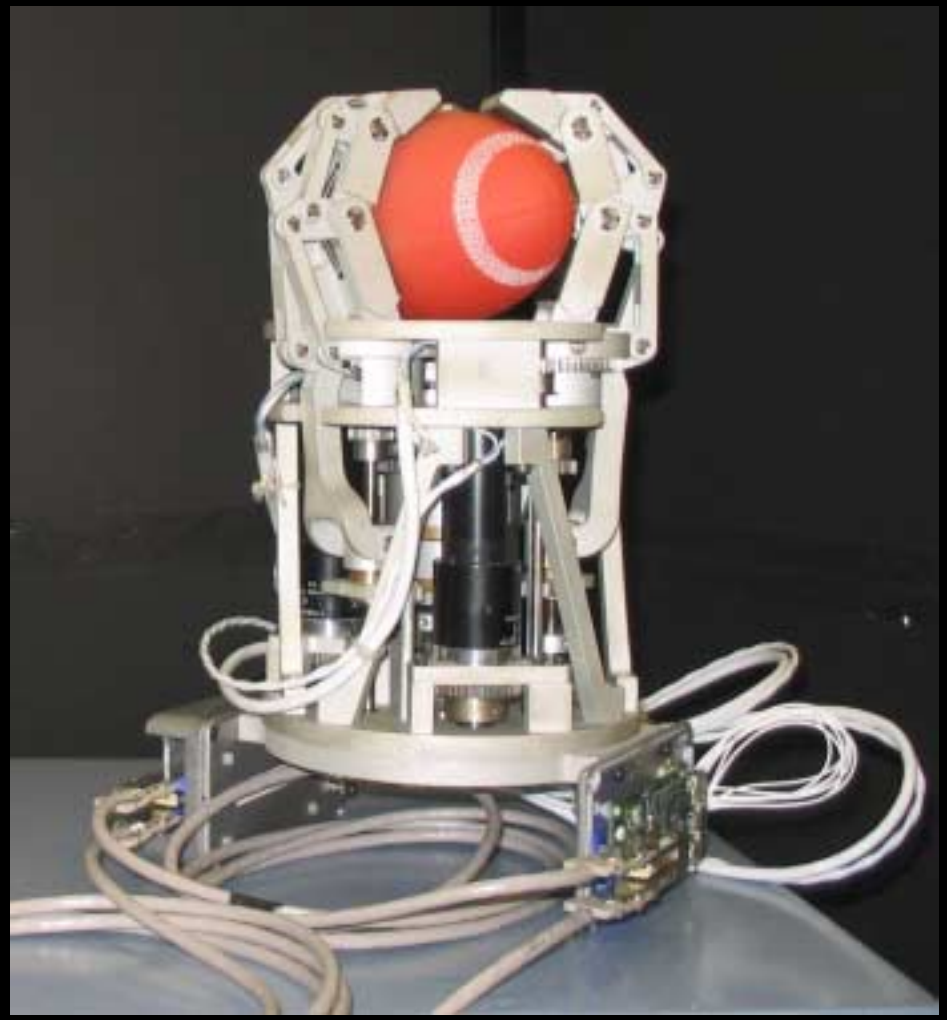

xiphos.ca

Demonstration Application

- Node fault tolerance
  - Failed nodes are detected and replaced transparently by the backup node
  - Motor nodes exchange internal data (PID integrator value) to smooth transition to/from backup nodes
- Network fault tolerance
  - One cable can be disconnected without affecting the system behavior

xiphos.ca

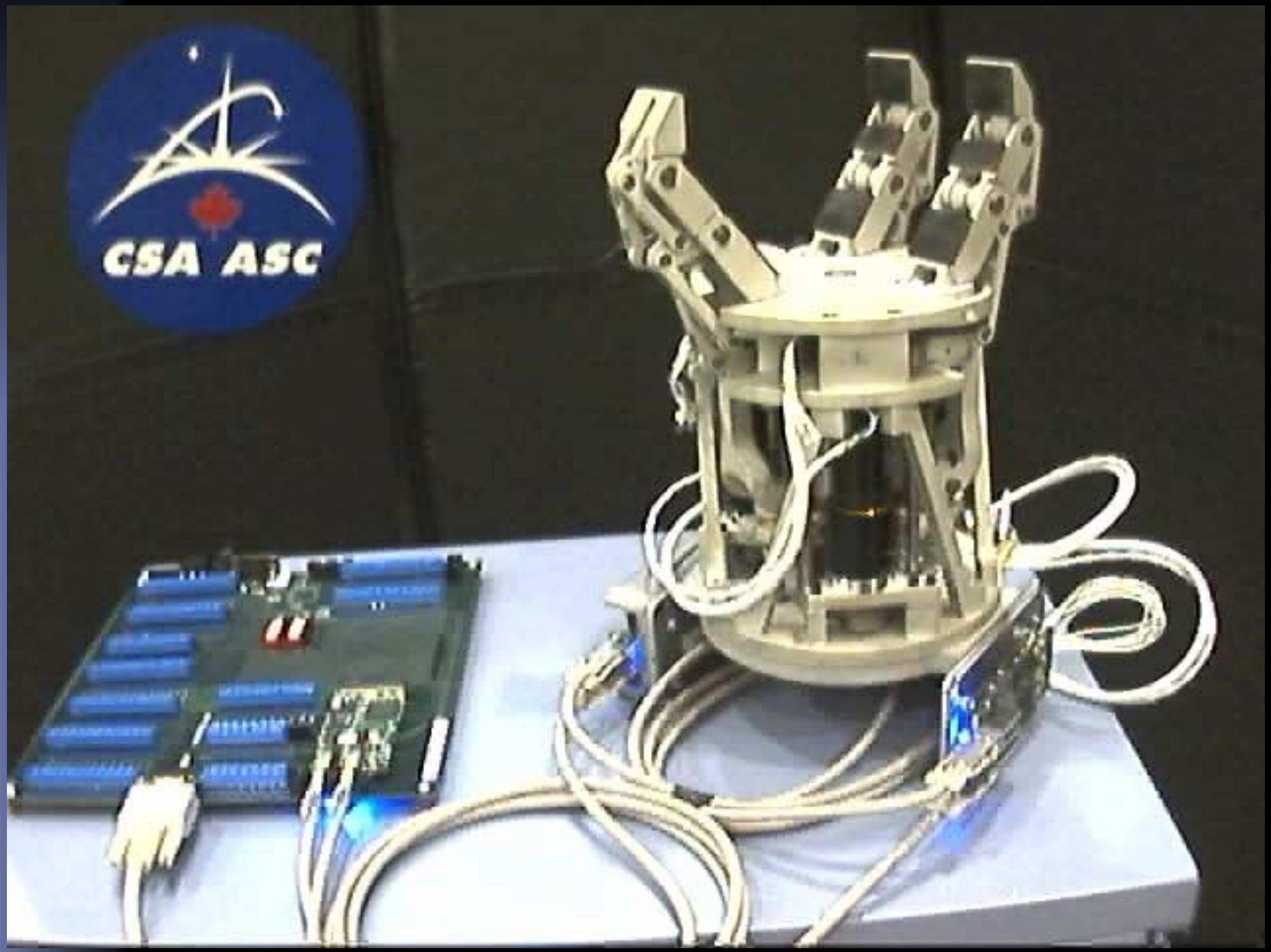

xiphos.ca

Demonstration Application

- Each SARAH node contains a SpaceWire bridge to connect standard SpaceWire devices

xiphos.ca

Questions?

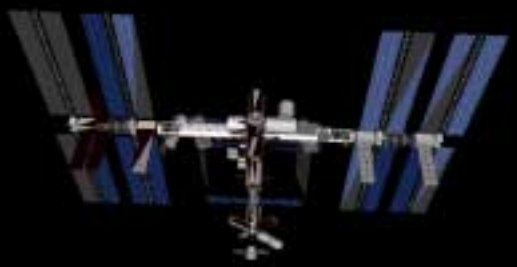

Reach out and
control something.

CSA ASC

xiphos.ca